LED Nixie Tube Driver and Keyboard Control Chip CH452

Datasheet
Version: 2G
http://wch.cn

1. Overview

CH452 is a LED nixie tube display driver and keyboard scan control chip. CH452 has a built-in clock oscillation circuit, which can dynamically drive 8-bit LED Nixie tubes or 64 LEDs, with BCD decoding, flash, shift, segment addressing, light column decoding and other functions. It can also scan the keyboard with 64 keys. CH452 exchanges data with a MCU through a 4-wire serial interface that can be cascaded or 2-wire serial interface. And CH452 provides the power on reset signal for the MCU.

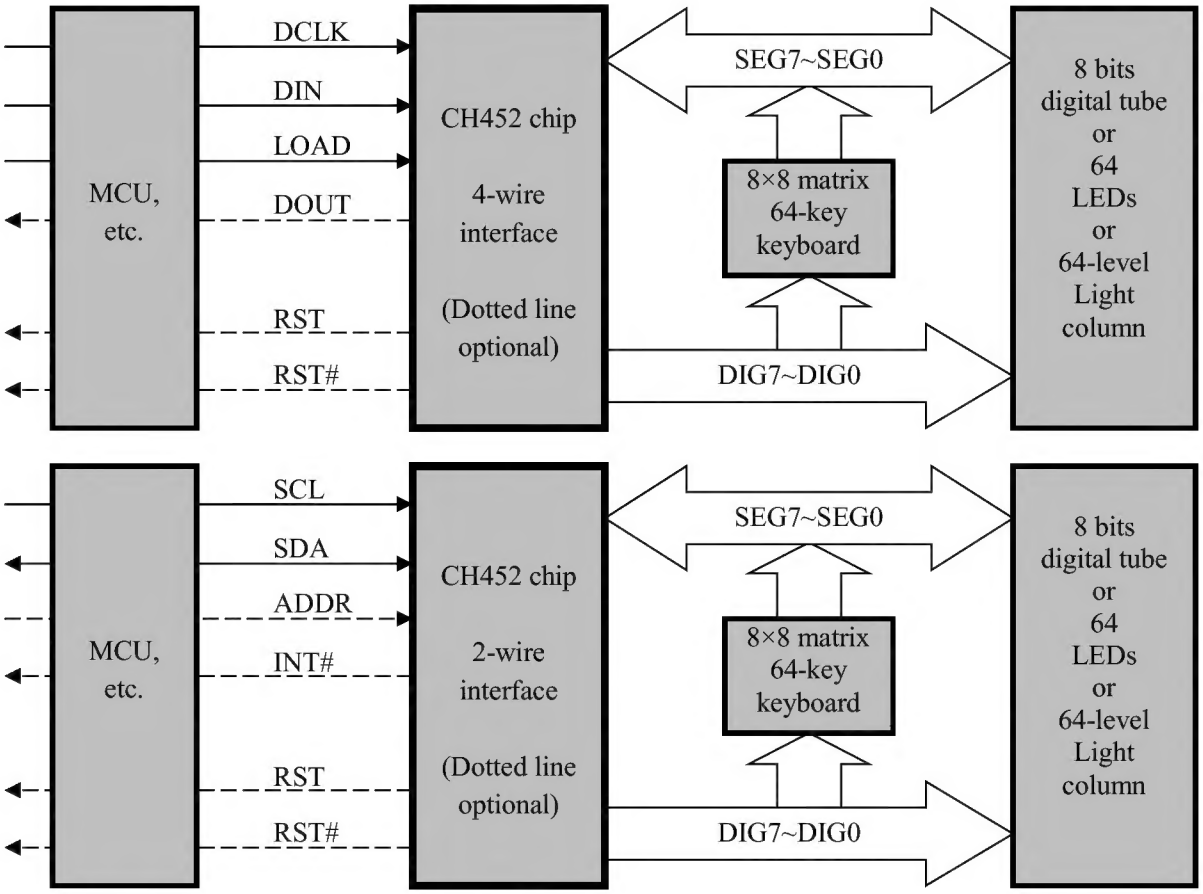

2. Features

2.1. Display Driver

- Built-in current driving stage, segment current not less than 20mA, word current not less than 100mA.
- Dynamic display scanning control, direct drive of 8-bit LED Nixie tubes or 64 LEDs or 64-level light column.
- The corresponding non-decoding mode or BCD decoding mode can be selected for the segment and data bit of the LED Nixie tube.
- BCD decoding supports a customized BCD code for displaying a special character.
- Left shift, right shift, left cycle and right cycle of the LED Nixie tube word data.
- Digital independent flash control of each LED Nixie tube, and the slow and fast scintillation speed can be selected.

- Any segment addressing, independently control ON and OFF of each LED or each segment of each LED Nixie tube.
- 64-level light column decoding, the light column value is displayed through the light column consisting of 64 LEDs.
- Scan limit control, support 1 ~ 8 LED Nixie tubes, and allocate scan time only to the valid LED Nixie tubes.
- Provide 16-level brightness control through duty ratio setting.
- The word drive output polarity can be selected to facilitate external expansion of drive voltage and current.

2.2. Keyboard Control

- Built-in 64-key keyboard controller, based on 8×8 matrix keyboard scan.
- Built-in pull-down resistor of key status input, built-in jitter suppression circuit.
- Keyboard interrupt, the low level active output or low level pulse output can be selected.
- Provide key release flag bit for query key to be pressed down and released.
- Support key wake-up, CH452 in the low-power and power saving state can be awakened by some keys.

2.3. External Interface

- The high-speed 4-wire serial interface or economical 2-wire serial interface can be selected for the same chip.
- 4-wire serial interface: support multiple chips cascade, clock speed from 0 to 2MHz, compatible with CH451 chip.
- 4-wire serial interface: DIN and DCLK signal line can be shared with other interface circuits to save the pins.
- 2-wire serial interface: support parallel connection of two CH452 chips (each address is set by ADDR pin level).
- 2-wire serial interface: 400 KHz clock speed, compatible with two-line I^2C bus to save pins.
- Built-in power on reset, providing reset output active at high level and active at low level for the MCU.

2.4. Miscellaneous

- Built-in clock oscillator circuit, no need to provide external clock or external oscillator components, more anti-interference.
- Support low-power sleep, save power, can be waked up by key or command operation.
- It supports 3V~5V supply voltage.
- Provide SOP28 and DIP24S lead-free packages, compatible with RoHS, pins compatible with CH451 chip.

3. Package

4-wire serial interface

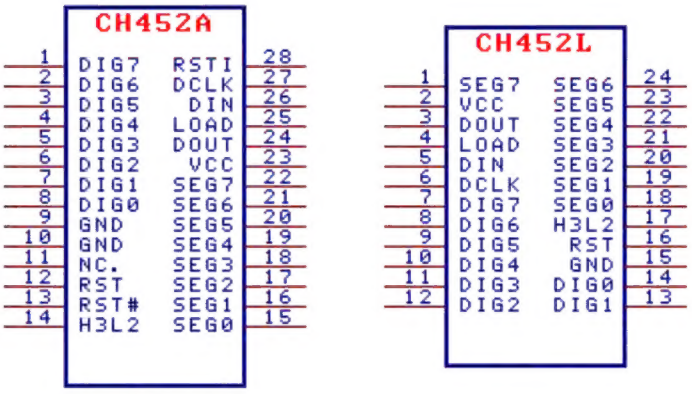

2-wire serial interface

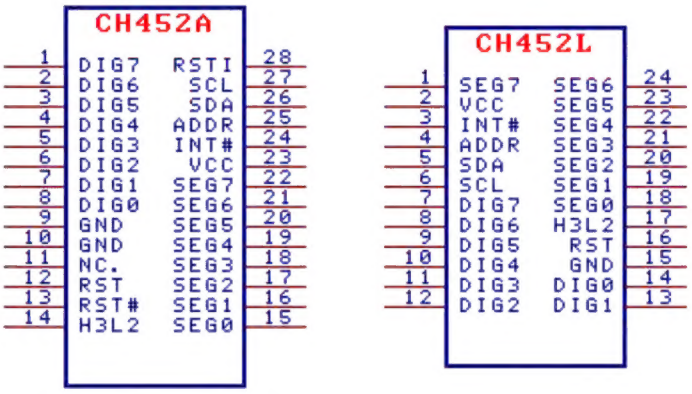

Package	Width		Pitch of Pin		Instruction of Package	Ordering information
SOP28	7.62mm	300mil	1.27mm	50mil	Standard 28-pin pin patch	CH452A
DIP24S	7.62mm	300mil	2.54mm	100mil	Narrow 24-pin dual in-line package	CH452L

Note: There are two versions of CH452 chips, V1 (lot No. 2042XXXXX, which was discontinued in 2010 and has been supplied for 2 transition years) and V2 (other than the lot No. of 2042XXXXX). The main difference is the addressing of light column decoding and segment addressing. This manual is applicable to V2 version only.

Notes: Based on the considerations of the cost and supply cycle, patch package is recommended.

4. Pins

4.1. Standard Public Pins

SOP28 Pin No.	DIP24S Pin No.	Pin name	Type	Pin description
23	2	VCC	Power	Positive power supply, continuous current not less than 150mA
9, 10	15	GND	Power	Common ground, continuous current not less than 150mA
22~15	1, 24~18	SEG7 ~SEG0	Three-status output and input	Segment drive of LED Nixie tube, active at high level Keyboard scan input, active at high level, built-in pull-down resistor
1~8	7~14	DIG7 ~DIG0	Output	Word drive of LED Nixie tube, active at low level

				Keyboard scan input, active at high level, DIG6 and DIG7 can be used for GPO universal output
14	17	H3L2	Input	Serial interface mode selection, built-in pull-up resistor, 4-wire interface is selected for high level, while 2-wire interface is selected for low level
12	16	RST	Output	Power-on rest output, active at high level
13	None	RST#	Output	Power on reset output, active at low level
28	None	RSTI	Input	Manual reset input, active at high level, built-in pull-down resistor
11	None	NC. / GPI	Input	Available for GPI universal input

4.2. 4-wire Interface Pins

Pin No. for 28-pin package	Pin No. for 24-pin package	Pin name	Type	Pin description
25	4	LOAD	Input	Data loading of 4-wire serial interface, built-in pull-up resistor
26	5	DIN	Input	Data input of 4-wire serial interface, built-in pull-up resistor
27	6	DCLK	Input	Data clock of 4-wire serial interface, built-in pull-up resistor
24	3	DOUT	Built-in pull-up Open-drain output	4-wire serial interface data output, Keyboard interrupt output, active at low level

4.3. 2-wire Interface Pins

Pin No. for 28-pin package	Pin No. for 24-pin package	Pin name	Type	Pin description
25	4	ADDR	Input	Address selection of 2-wire serial interface, built-in pull-up resistor
26	5	SDA	Open-drain output and input	Data input and output of 2-wire serial interface, Built-in pull-up resistor
27	6	SCL	Input	Data clock of two-wire serial interface, built-in pull-up resistor
24	3	INT#	Built-in pull-up Open-drain output	2-wire serial interface interrupt output, Keyboard interrupt output, active at low level

5. Functional Specification

5.1. General Specification

For data in this datasheet, those ending with B are binary numbers and those ending with H are hexadecimal numbers. Otherwise, they are decimal numbers. The bit marked as x indicates that the bit can be any value.

The MCU (also DSP, microprocessor and other controllers) controls CH452 chip through the serial interface. CH452 LED Nixie tube display driver and the keyboard scanning control are independent mutually. The MCU can enable and turn off these two functions respectively through operation commands.

5.2. Display Driver

CH452 uses dynamic scanning driver for the LED Nixie tube and LED. The order is DIG0 to DIG7. When one pin sinks the current, the other pins do not sink the current. CH452 has internal current driving stage, which can directly drive 0.5-inch to 1-inch common cathode LED Nixie tube. The segment drive pins SEG6-SEG0 correspond to the segments G-A, the segment drive pin SEG7 corresponds to the decimal point of the LED Nixie tube, and the word drive pins DIG7~DIG0 are respectively connected to the cathodes of 8 LED Nixie tubes. CH452 can also be connected to an 8×8 matrix LED array or 64 independent LEDs or 64-level light column. CH452 can change the output polarity of the word drive so as to directly drive the common anode LED Nixie tube (non-decoding mode), or connected to an external inverse phase driver to support a common anode LED Nixie tube, or connected to a high-power tube to support a large-size LED Nixie tube.

The CH452 supports scan limit control and allocates scan time only to the valid LED Nixie tubes. When the scan limit is set to 1, the unique LED Nixie tube DIG0 will get all the dynamic drive time, thus equating to the static drive. When the scan limit is set to 8, the 8 LED Nixie tubes DIG7~DIG0 will each get 1/8 of the dynamic drive time. When the scan limit is set to 4, the 4 LED Nixie tubes DIG3~DIG0 will each get 1/4 of the dynamic drive time. At this time, the average drive current of each LED Nixie tube will be doubled compared with the scan limit of 8, so reducing the scan limit can improve the display brightness of the LED Nixie tube.

CH452 has 8 8-bit data registers, which are used to store 8 word data, corresponding to 8 LED Nixie tubes or 8 groups of LEDs driven by CH452, 8 LEDs in each group. CH452 supports left shift, right shift, left cycle and right cycle of the word data in the data register, and supports independent flash control of each LED Nixie tube. During the left and right shift or left and right cycle movement of the word data, the properties of flash control will not move with the data.

CH452 supports any segment addressing and can be used to independently control any one of 64 LEDs or a specific segment in a LED Nixie tube (for example, a decimal point). All segments are uniformly addressed from 00H to 3FH. When the segment position of an address is set to 1 with the command of "Segment Addressing Set to 1", the segment of the LED or LED Nixie tube corresponding to that address will be ON. This operation does not affect the status of any other LED or other segments of the LED Nixie tube.

CH452 supports 64-level light column decoding, and indicates 65 states with 64 LEDs or 64-level light column. When the new column value is loaded, the LEDs addressed less than the specified column value will be ON, while those addressed greater than or equal to the specified column value will be OFF.

The following table shows 8×8 matrix addressing between DIG7~DIG0 and SEG7~SEG0 of CH452 chip (version V2), which is used for the addressing of the segments for the LED Nixie tube, LED arrays and light columns. For the addressing of the CH452 chip (version V1), please refer to the Key Coding Table.

Matrix addressing	DIG7	DIG6	DIG5	DIG4	DIG3	DIG2	DIG1	DIG0
SEG0	38H	30H	28H	20H	18H	10H	08H	00H

SEG1	39H	31H	29H	21H	19H	11H	09H	01H
SEG2	3AH	32H	2AH	22H	1AH	12H	0AH	02H
SEG3	3BH	33H	2BH	23H	1BH	13H	0BH	03H
SEG4	3CH	34H	2CH	24H	1CH	14H	0CH	04H
SEG5	3DH	35H	2DH	25H	1DH	15H	0DH	05H
SEG6	3EH	36H	2EH	26H	1EH	16H	0EH	06H
SEG7	3FH	37H	2FH	27H	1FH	17H	0FH	07H

CH452 works in non-decoding mode by default, and the bit 7~bit 0 of the word data in 8 data registers correspond to the decimal points and segments G-A of 8 LED Nixie tubes respectively at this time. For LED array, the data bit of each word data uniquely correspond to an LED. When the data bit is 1, the segment of the corresponding LED Nixie tube or LED will be on. When the data bit is 0, the segment of the corresponding LED Nixie tube or LED will be off. For example, the bit 0 of the third data register is 1, so the segment A of the corresponding third LED Nixie tube is on. CH452 can also work in the decoding mode of BCD through setting, which is mainly used in the drive of LED Nixie tube. As long as the MCU gives a binary BCD code, CH452 will directly drive the LED Nixie tube to display the corresponding characters after decoding. BCD decoding mode refers to the BCD decoding for the bit 4 ~ bit 0 in of the word data in the data register, control the output of the segment drive pins SEG6~SEG0, which is corresponding to the segment G ~ segment A of the LED Nixie tube. At the same time, the bit 7 of the word data is used to control the output of the segment drive pin SEG7, which is corresponding to the decimal point of the LED Nixie tube, and the bit 6 and bit 5 of the word data will not affect the BCD decoding. The following table shows the corresponding segments G ~ A and the characters displayed in the LED Nixie tube after the BCD decoding of the bits 4 ~ 0 of the word data in the data register. Refer to the following table. If you need to display the character 0 on the LED Nixie tube, just input the data 0xx00000B or 00H. If you need to display the character 0. (0 with decimal point), just input the data 1xx00000B or 80H. Similarly, data 1xx01000B or 88H corresponds to the character 8. (8 with decimal point). Data 0xx10011B or 13H corresponds to the character =. Data 0xx11010B or 1AH corresponds to the character . (decimal point). Data 0xx10000B or 10H corresponds to character (space, not displayed by the LED Nixie tube). Data 0xx11110B or 1EH corresponds to a customized special character defined by the "Customized BCD Code" command.

The following diagram shows the segment name of the LED Nixie tube

The following table is the BCD Decoding Table

Bit 4 ~ bit 0	Segment G ~ segment A	Displayed characters	Bit 4 ~ bit 0	Segment G ~ segment A	Displayed characters
00000B	0111111B	0	10000B	0000000B	space
00001B	0000110B	1	10001B	1000110B	-| -1 or plus
00010B	1011011B	2	10010B	1000000B	- minus
00011B	1001111B	3	10011B	1000001B	= equal sign
00100B	1100110B	4	10100B	0111001B	[left square bracket
00101B	1101101B	5	10101B	0001111B	] right square bracket
00110B	1111101B	6	10110B	0001000B	_ Underline

00111B	0000111B	7	10111B	1110110B	H letter H
01000B	1111111B	8	11000B	0111000B	L letter L
01001B	1101111B	9	11001B	1110011B	P letter P
01010B	1110111B	A	11010B	0000000B	. decimal point
01011B	1111100B	b	11110B	SELF_BCD	Customized character
01100B	1011000B	c	Rest	0000000B	space
01101B	1011110B	d	SELF_BCD is commanded by "Customized BCD Code" A new character defined with the default value of space after reset		
01110B	1111001B	E			
01111B	1110001B	F			

The following figure is the internal circuit diagram of CH452 segment drive pins SEG7 ~ SEG0.

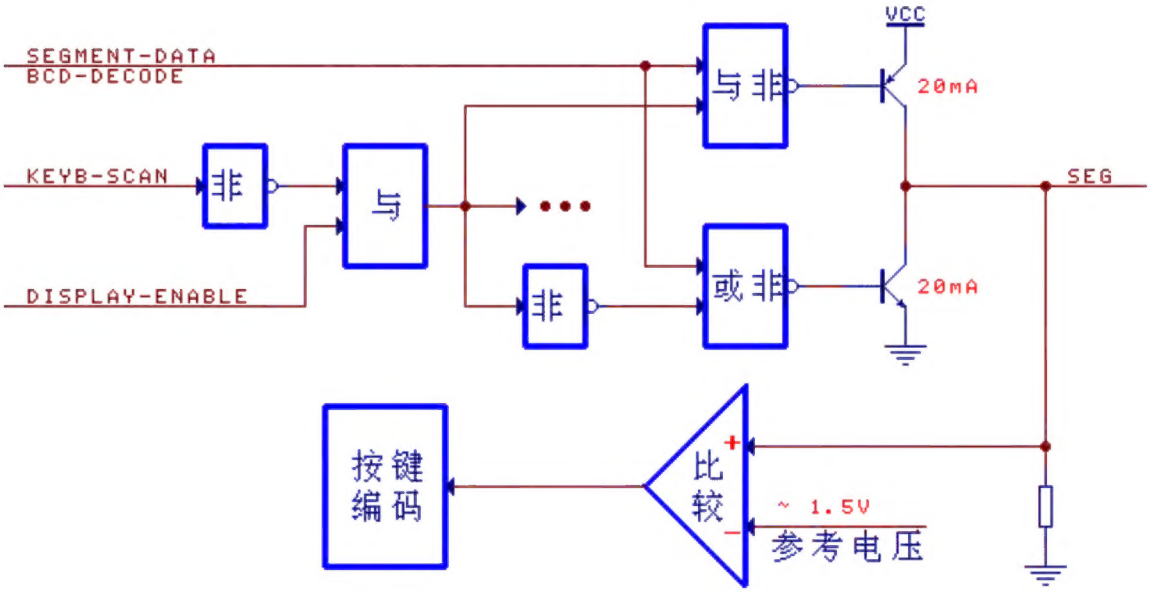

The following figure is the internal circuit diagram of CH452 word drive pins DIG7~DIG0.

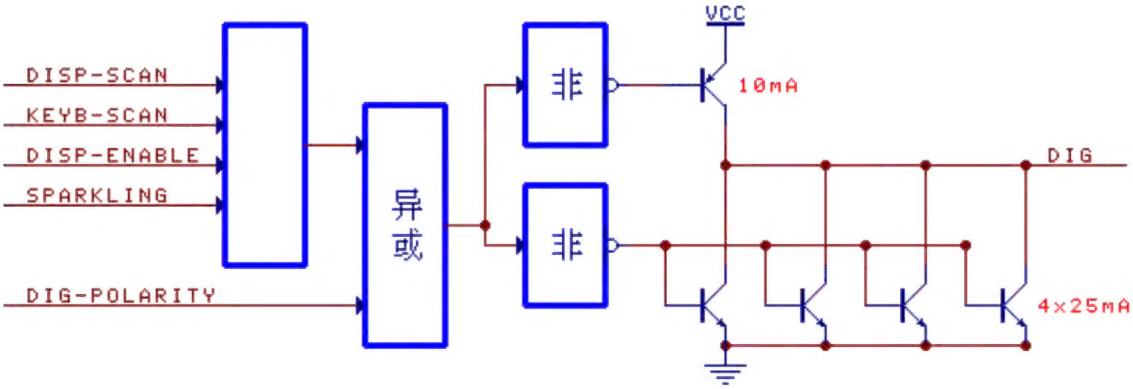

5.3. Keyboard Scan

CH452 keyboard scan feature supports an 8×8 matrix 64-key keyboard. During keyboard scan, pins DIG7~DIG0 are used for the column scan output, and SEG7~SEG0 pins have internal pull-down resistors for the line scan input. When the keyboard scan is enabled, the function of DOUT pins in the 4-line serial interface is changed from data output of the serial interface to keyboard interrupt output and key data output.

CH452 periodically inserts keyboard scan during the display driver scan. During keyboard scan, the pins DIG7~DIG0 output high level in sequence from DIG0 to DIG7, and the remaining 7 pins output low level.

The outputs of the pins SEG7-SEG0 are disabled. When no key is pressed, SEG7-SEG0 are pulled down to low level. When a key is pressed, for example, the key connecting DIG3 and SEG4 is pressed, SEG4 detects high level when DIG3 outputs high level. In order to avoid error code caused by key jitter or external interference, CH452 performs two scans. Only when the results of two keyboard scans are the same, the key will be confirmed to be valid. If CH452 detects a valid key, it will record the key code, and generate a keyboard interrupt active at low level through the DOUT pin in the 4-line serial interface or the INT# pin in the 2-line serial interface (when INTM is 1, output low level pulse interrupt, refer to the instructions in Sections 5.5 and 5.6). At this time, the MCU can read the key code through the serial interface. CH452 does not generate any keyboard interrupt until a new valid key is detected. CH452 does not support combination key, that is, two or more keys cannot be pressed at the same time. If multiple keys are pressed at the same time, the key with the smaller key code will take precedence. In the case of time priorities, the one firstly pressed is valid.

The key code provided by CH452 is 8-bit (the 4-wire interface mode provides only the lower 7 bits), bit 2 ~ bit 0 are column scan codes, bits 5 ~ bit 3 are line scan codes, and bit 6 is status code (1 when the key is pressed, 0 when the key is released), bit 7 is the GPI input state flag bit. For example, when the key connecting DIG3 and SEG4 is pressed, the key code is 1100011B or 63H. After the key is released, the key code is usually 0100011B or 23H (or other values, but certainly less than 40H), where the column scan code corresponding to DIG3 is 011B, and the line scan code corresponding to SEG4 is 100B. The MCU can read the key code at any time, but it generally reads the key code when CH452 detects a valid key and produces keyboard interrupt. At this time, the bit 6 of the key code is always 1. In addition, if you need to know when the key is released, the MCU can read the key code regularly by inquiry until the bit 6 of the key code is 0.

The following table shows 8×8 matrix key coding between DIG7~DIG0 and SEG7~SEG0. As the key code is 7-bit, the bit 6 is always 1 when the key is pressed. When the key is pressed, the actual key code provided by CH452 is the key coding in the table plus 40H, that is, the key code should be 40H-7FH.

Key coding	DIG7	DIG6	DIG5	DIG4	DIG3	DIG2	DIG1	DIG0
SEG0	07H	06H	05H	04H	03H	02H	01H	00H
SEG1	0FH	0EH	0DH	0CH	0BH	0AH	09H	08H
SEG2	17H	16H	15H	14H	13H	12H	11H	10H
SEG3	1FH	1EH	1DH	1CH	1BH	1AH	19H	18H
SEG4	27H	26H	25H	24H	23H	22H	21H	20H
SEG5	2FH	2EH	2DH	2CH	2BH	2AH	29H	28H
SEG6	37H	36H	35H	34H	33H	32H	31H	30H
SEG7	3FH	3EH	3DH	3CH	3BH	3AH	39H	38H

5.4. Additional Functions

CH452 can provide power on reset to the MCU. The reset input pins of MCU, DSP and microprocessor can be directly connected to RST pin or RST# pin of CH452 as required. When CH452 is energized, RST pin outputs the reset pulse signal active at high level, and RST# pin outputs the reset pulse signal active at low level. The power on reset pulse signal of CH452 also acts on the internal circuit of CH452 chip.

CH452 power on reset refers to the reset pulse generated during the power-on process (the process from the power-off state to the normal power supply state). In order to reduce the power interference caused by the high drive current of CH452, when the printed circuit board (PCB) is designed, a set of power supply decoupling capacitors should be connected in parallel between positive and negative power supplies, which are close to CH452 chip, including at least one leaded multilayer ceramic capacitor or porcelain capacitor with capacity of not less than 0.1uF and one electrolytic capacitor with capacity of not less than 100uF.

5.5. 4-wire Serial Interface

The following is the block diagram.

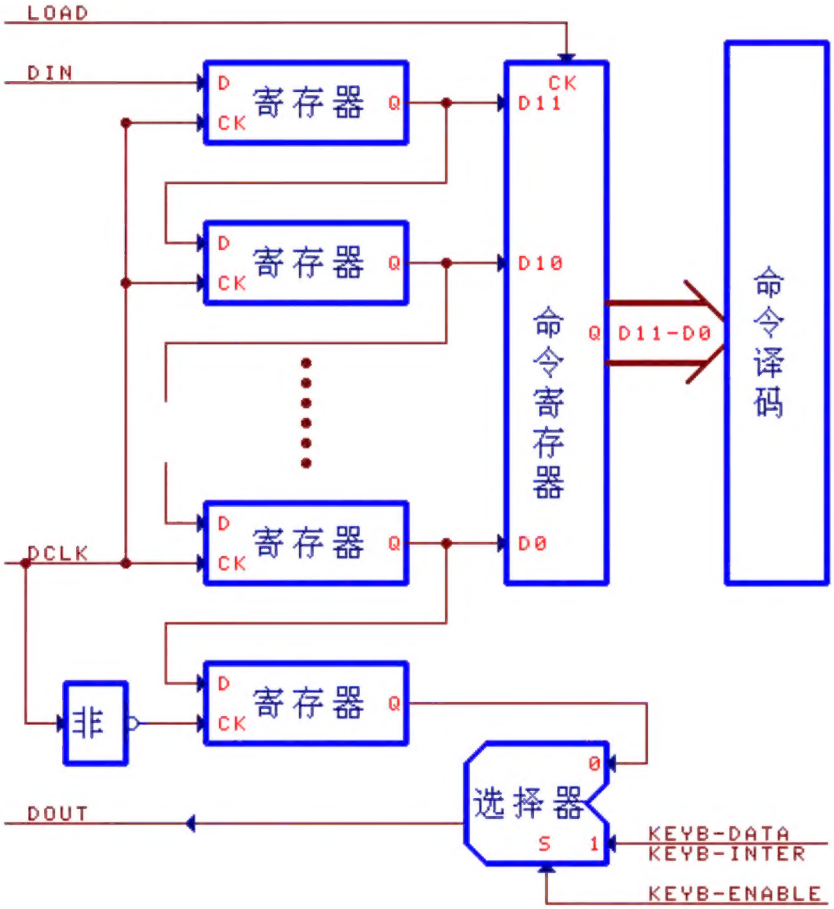

CH452 has a high speed 4-wire serial interface realized by hardware, including 4 signal lines: serial data input line DIN, serial data clock line DCLK, serial data load line LOAD, and serial data output line DOUT. Wherein, DIN, DCLK and LOAD are the input signal line with a pull-up resistor and at high level by default. DOUT is the serial data output line when keyboard scan function is not enabled. When the keyboard scan function is enabled, it acts as a keyboard interrupt and data output line and at high level by default.

DIN is used to provide serial data. The high level represents bit data 1, and the low level represents bit data 0. The sequence of serial data input is that the low bit is at the front and the high bit is at the back.

DCLK is used to provide a serial clock, CH452 inputs data from DIN on its rising edge and outputs data from DOUT on its falling edge. CH452 has an internal 12-bit shift register. At the rising edge of DCLK, the bit data on DIN is shifted to the highest bit register of the shift register, and so on. The original low-bit data is shifted to the lowest bit register, and the original low-bit data is output from DOUT on the first falling edge after the rising edge. The CH452 allows DCLK pins to have a serial clock frequency of up to 10MHz, so as to realize high speed serial input and output.

LOAD is used to load the serial data, and CH452 loads the 12-bit data in the shift register on its rising edge, which is analyzed and processed as an operation command. In other words, the rising edge of LOAD is the frame completion flag of the serial data frame, at which point CH452 will regard the 12-bit data in the shift register as an operation command whether or not it is valid.

Since CH452 only loads the command data and processes it on the rising edge of LOAD, the MCU cannot use the LOAD signal line for other purposes, but DIN and DCLK can be used for other purposes. When the MCU I/O pin resources are limited, CH452 only needs to use the LOAD signal line exclusively, and DIN and DCLK signal lines can be shared with other interface circuits.

The following is the process that MCU outputs serial data to CH452 (not the only process, there can be a lot of changes):

① Output one bit of data, that is, output the lowest bit data B0 to DIN, and output the low level pulse (from high level to low level and resume to high level) to DCLK, including an rising edge to make CH452 input bit data;

② In the same way, output the bit data B1~B11;

③ Output low level pulse to LOAD, including a rising edge to make CH452 load serial data.

In this specification, B0^B1^B2^B3^B4^B5^B6^B7^B8^B9^B10^B11^↑ will be used as the simplified description of the above process, where ^ represents the rising edge of DCLK, ↑ represents the rising edge of LOAD, B0 ~ B11 represent 1 bit of data respectively. If it is character 0 or 1, it corresponds to the input bit data input of DIN, if it is character L or H, it corresponds to the output bit data 0 or 1 of DOUT. For example, 1^0^0^0^0^0^0^0^0^1^0^0^↑ represents a set of 12-bit serial data 001000000001B sent to CH452. 1^1^1^0^↑H^H^L^L^L^H^H^ represents that a set of 4-bit serial data 0111B is firstly sent to CH452, and then a set of 7-bit serial data 1100011B is received.

When keyboard scan function is not enabled, DOUT is used to output serial data, and the lowest bit data in the shift register always appears in the DOUT pin on the falling edge of DCLK. CH452 supports unlimited cascaded and can be connected to multiple CH452 chips with only 3 signal lines. Of which, DCLK of all CH452 are connected in parallel to the DCLK output of the MCU, LOAD all of CH452 are connected in parallel to the LOAD output of MCU, the DIN of CH452 in the post stage is connected to the DOUT output of CH452 in the front stage, and the DIN of CH452 in the foremost stage is connected to the DIN output of the MCU. In a cascade circuit, the serial data output by the MCU each time must be the digit of the serial data of a single CH452 multiplied by the series of the cascade. For example, the serial data of CH452 is 12 bits. If 3 CH452 are cascaded, the data bits output each time by the MCU must be 36 bits, which are the command data of the CH452 in the post stage, the command data of the CH452 in the intermediate stage and the command data of the CH452 in the front stage in sequence.

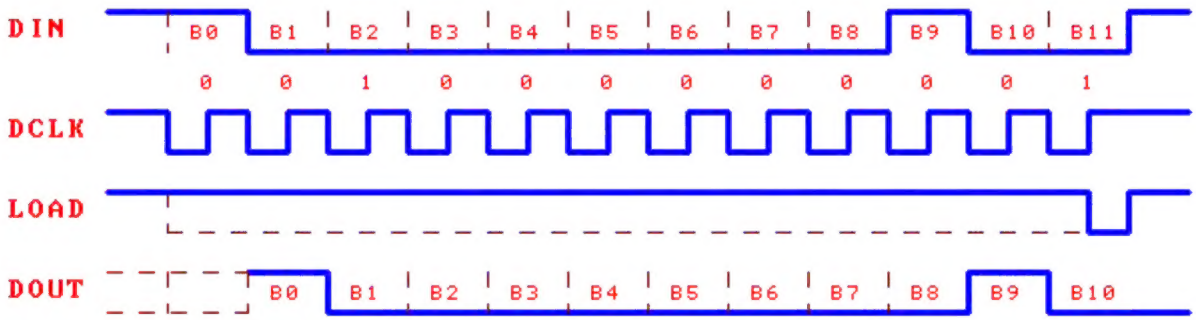

The figure above is a waveform diagram of the 12-bit data sent by the MCU to CH452 through a 4-line serial interface when the keyboard scan function is not enabled. The data is 001000000001B, and the low level pulse of LOAD can be wider, which is represented by the dotted line in the figure.

When the keyboard scan function is enabled, DOUT is used for keyboard interrupt and data output and is at high level by default. When CH452 detects a valid key, DOUT will output the keyboard interrupt active at low level. When the MCU is interrupted, it will send the command to read the key code, and CH452 will output the highest bit 7 in the lower 7 bits of the key code from DOUT after the rising edge of LOAD. The MCU will continue to output the serial clock, on each falling edge of DCLK, CH452 will output the remaining 6 bits in the lower 7 bits of the key code from DOUT successively, with the sequence of high bit in front and low bit in rear. After the lower 7 bits of key code are output, CH452 will restore DOUT to the default high level no matter how the DCLK changes. Refer to the figure below, the process of the MCU obtaining the key code from CH452 is as follows:

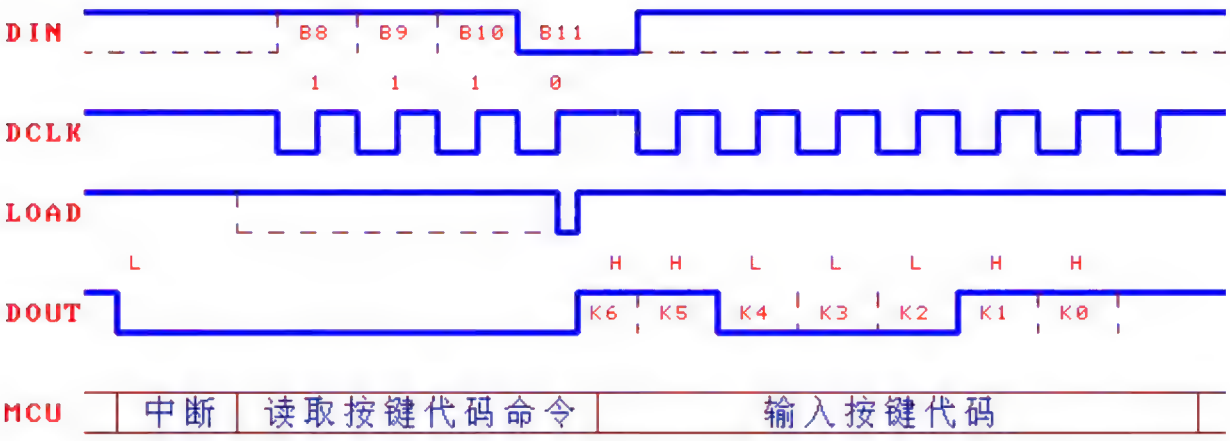

① Output one bit data, that is, output the lowest bit data B0 of the reading key code command to DIN, and output the low level pulse to DCLK;
② In the same way, output the bit data B1~B11 of the reading key code command;
③ Output low level pulse to LOAD, including a rising edge to make CH452 load the serial data. According to the analysis by CH452, it reads the key code command and immediately outputs the highest bit data K6 of the key code in DOUT;
④ Read one bit data, that is, input the highest bit data K6 of the key code from DOUT, and output the low level pulse to DCLK;
⑤ In the same way, input the bit data K5~K0 of the key code.

In fact, only the bit data B8~B11 is valid in the key code command read by CH452, so it is not necessary for the MCU to send the read key code command B0~B7. For example, if the key code is 63H, the simplified description of the above process is 1^1^1^0^↑H^H^L^L^L^H^H^, that is, send the read key code command 0111xxxxxxxxB to CH452, and then receive the key code 1100011B from DOUT. The figure above is the waveform diagram of the MCU sending commands to CH452 and receiving key codes. MCU refers to the working state of the MCU.

If INTM is set to 1 in the "Set System Parameters" command and the key interrupt output mode is selected as low level pulse (edge interrupt), then when CH452 detects a valid key, the key interrupt output by DOUT is the low level pulse with a width of several microseconds.

5.6. 2-wire Serial Interface

CH452 has an economical 2-wire serial interface, including 2 main signal lines: serial data clock input line SCL, serial data input and output line SDA. 2 auxiliary signal lines: serial interface address selection line ADDR, serial interface interrupt output line INT#. Wherein, SCL and ADDR are the input signal lines with a pull-up resistor and at high level by default. SDA is a semi-bidirectional signal line with a pull-up resistor and at high level by default. INT# is an open-drain output with a pull-up resistor. When the keyboard scan function is enabled, it acts as a keyboard interrupt output line and at high level by default.

SDA is used for serial data input and output. The high level represents bit data 1, and the low level represents bit data 0. The sequence of serial data input is that the high bit is at the front and the low bit is at the back.

SCL is used to provide a serial clock, CH452 inputs data from SDA during high level after its rising edge and outputs data from SDA during low level after its falling edge.

ADDR is used to statically select the device address for CH452. In order to save the I/O pins of the MCU, two CH452 chips can be connected to the same set of SCL and SDA signal lines, which is called parallel connection mode. In order to distinguish the two CH452, the ADDR pin of one CH452 can be connected to the low level, and the ADDR of the other CH452 can be connected to the high level (or suspended), so that

the two have different device addresses.

SDA falling edge occurring during the SCL high level period is defined as the start signal of the serial interface, CH452 receives and analyzes commands only after a start signal is detected. Therefore, when the MCU I/O pin resources are limited, not only INT# pin can be replaced by the pulse interrupt mode of SDA pin, but SCL pin can also be shared with other interface circuits as long as the SDA pin state remains unchanged.

The following is the process that MCU outputs serial data to CH452 (not the only process, there can be a lot of changes):

① SDA outputs high level, SCL outputs high level, ready to start signal;
② SDA outputs low level, generate start signal;
③ SCL outputs low level, start completed;
④ Output one bit of data, that is, output the highest bit data DA0 (always 0) to SDA, and output the high level pulse (from low level to high level and resume to low level) to SCL, including a rising edge and high level to make CH452 input bit data;
⑤ In the same way, output bit data DA1 (always 1), ADDR (address selection), B11 ~ B8;
⑥ In the same way, output bit data R/ -W, low level 0 represents write operation, that is, it will continue to output bit data;
⑦ In the same way, output bit data 1, that is, no output, so that I^2C device loops back the reply bit. Attention: by default CH452 does not loop back the reply bit, but will loop back the reply bit after executing a valid "2-wire Interface ACK" command;
⑧ In the same way, output the bit data B7~B0;
⑨ Directly ended, however, it is recommended to restore SCL to high level and the SDA to high level.

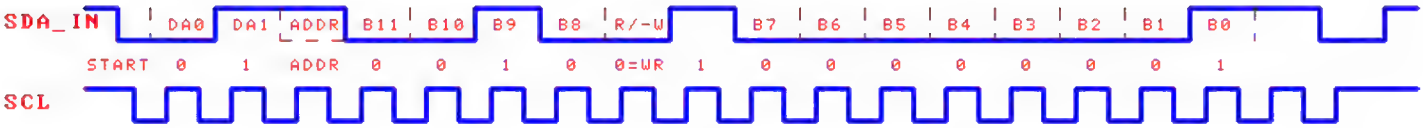

The figure above is a waveform diagram of the 12-bit data sent by the MCU to CH452 through a 2-line serial interface. The data is 001000000001B, and ADDR is used to select device addresses, which is represented by the dotted line in the figure.

INT# is used for keyboard interrupt output and is at high level by default. INT# outputs keyboard interrupt active at low level when CH452 detects a valid key. After the MCU is interrupted, it sends out the read key code command, and CH452 recovers the INT# to high level and outputs the key code from SDA. Refer to the figure below, the process of the MCU obtaining the key code from CH452 is as follows:

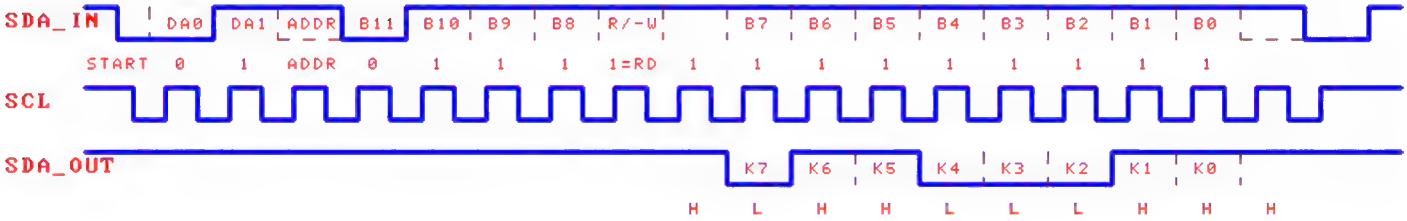

① SDA outputs high level, SCL outputs high level, ready to start signal;
② SDA outputs low level, generate start signal;
③ SCL outputs low level, start completed;
④ Output one bit of data, that is, output the highest bit data DA0 (always 0) to SDA, and output the high level pulse (from low level to high level and resume to low level) to SCL, including a rising edge and high level to make CH452 input bit data;
⑤ In the same way, output bit data DA1 (always 1), ADDR (address selection), B11 ~ B8;

⑥ In the same way, output the bit data R/-W, the high level 1 represents the read operation, that is, CH452 is required to output bit data;

⑦ In the same way, output bit data 1, that is, no output, so that I^2C device loops back the reply bit. Attention: by default CH452 does not loop back the reply bit, but will loop back the reply bit after executing a valid "2-wire Interface ACK" command;

⑧ During the low level of SCL, CH452 outputs the bit data K7 to SDA, and the MCU outputs the high level pulse to SCL, and reads the bit data from SDA during the high level of SCL;

⑨ In the same way, CH452 outputs the bit data K6~K0, the MCU outputs the bit data as the key code;

⑩ Directly ended, however, it is recommended to restore SCL to high level and the SDA to high level.

The figure above is the waveform diagram of the MCU sending commands to CH452 and receiving key codes. The command data is 0111xxxxxxxxB, and the received key code is 01100011B.

If INTM is set to 1 in the "Set System Parameters" command and the key interrupt output mode is selected as low level pulse (edge interrupt), then when CH452 detects a valid key, it will wait until SCL and SDA are idle (SCL and SDA will remain the high level for more than 40 microseconds), and then output the low level pulse with the width of several microseconds as the keyboard interrupt from SDA, and then output the keyboard interrupt active at low level from INT#. This interrupt mode is used to save the I/O pins of the MCU, only SCL and SDA need to be connected instead of INT#. When the MCU is idle, it will make SCL and SDA keep high level, and CH452 will inform the MCU for keyboard interrupt through the low level pulse of SDA.

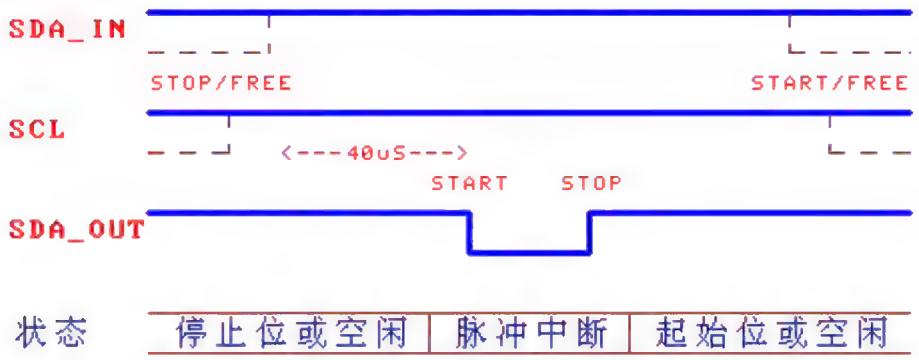

6. Operation Command (only Applicable to the V2 Version of CH452 Chip)

The CH452 operation commands are all 12 bits. The 12-bit serial data corresponding to each operation command of CH452 is listed in the table below. Among, the bit marked with x indicates that this bit can be any value. The bit marked with a name indicates that the bit has a corresponding register in the CH452 chip, and its data changes according to different operation commands.

The 4-wire interface mode only supports the commands including "Write" and [Read Key Code] in the [Direction] property in the table below. For the 4-wire interface mode, the MCU cannot read back the data previously written into CH452, and the command of reading key code is the only command with data return.

The 2-wire interface mode supports all commands in the table below. The direction bit R/-W is used to indicate read or write operation, i.e. the data transmission direction. For the 2-wire interface mode, the MCU can read back the data previously written for verification. The command marked in gray in the following table executes the write operation when the bit data R/-W is 0, and performs the read back operation when the bit data R/-W is 1.

Operation command	Direction	Bit 11	Bit 10	Bit 9	Bit 8	Bit 7	Bit 6	Bit 5	Bit 4	Bit 3	Bit 2	Bit 1	Bit 0
Blank operation	Write	0	0	0	0	x	x	x	x	x	x	x	x
Load light column value	Write	0	0	0	1	0	LEVEL						
Segment addressing clear to 0	Write	0	0	0	1	1	0	BIT_ADDR					
Segment addressing set to 1	Write	0	0	0	1	1	1	BIT_ADDR					
Chip internal reset	Write	0	0	1	0	0	0	0	0	0	0	0	1
Enter sleep state	Write	0	0	1	0	0	0	0	0	0	0	1	0
Set auxiliary parameters	Write	0	0	1	0	1	0	1	0	0	GPIE	0	LMTC
Word data left shift	Write	0	0	1	1	0	0	0	0	0	0	0	0
Word data right shift	Write	0	0	1	1	0	0	0	0	0	0	1	0
Word data left cycle	Write	0	0	1	1	0	0	0	0	0	0	0	1
Word data right cycle	Write	0	0	1	1	0	0	0	0	0	0	1	1
Customized BCD code	Write/read	0	0	1	1	1	SELF_BCD						
Set system parameters	Write/read	0	1	0	0	0	GPOE	INTM	SSPD	DPLR	WDOG	KEYB	DISP
Set display parameters	Write/read	0	1	0	1	MODE	LIMIT			INTENSITY			
Set flash control	Write/read	0	1	1	0	D7S	D6S	D5S	D4S	D3S	D2S	D1S	D0S
Load word data 0	Write/read	1	0	0	0	DIG_DATA, the corresponding word data of DIG0							
Load word data 1	Write/read	1	0	0	1	DIG_DATA, the corresponding word data of DIG1							
Load word data 2	Write/read	1	0	1	0	DIG_DATA, the corresponding word data of DIG2							
Load word data 3	Write/read	1	0	1	1	DIG_DATA, the corresponding word data of DIG3							
Load word data 4	Write/read	1	1	0	0	DIG_DATA, the corresponding word data of DIG4							
Load word data 5	Write/read	1	1	0	1	DIG_DATA, the corresponding word data of DIG5							

Load word data 6	Write/read	1	1	1	0	DIG_DATA, the corresponding word data of DIG6							
Load word data 7	Write/read	1	1	1	1	DIG_DATA, the corresponding word data of DIG7							
Read chip version	2-wire read	0	0	0	0	0	1	0	0	0	0	0	0
Read SEG pin	2-wire read	0	0	0	1	SEG7	SEG6	SEG5	SEG4	SEG3	SEG2	SEG1	SEG0
Read key code	Read	0	1	1	1	KEY7	KEY6	KEY5	KEY4	KEY3	KEY2	KEY1	KEY0
2-wire interface ACK	2-wire write	0	1	1	1	x	x	x	x	x	x	x	X

6.1. Blank Operation: 0000xxxxxxxxB

The blank operation command has no effect on CH452. This command can be used in the application with multiple CH452 cascades to send the operation commands to the CH452 in the post stage through the CH452 in the front stage without affecting the state of the front. For example, if the operation command 001000000001B needs to be sent to the CH452 in the post stage (DIN of CH452 in the post stage is connected to DOUT of CH452 in the front stage) in the two-stage cascade circuit, only the blank operation command 000000000000B needs to be added and then sent after this command. The simplified description is 1^0^0^0^0^0^0^0^0^1^0^0^0^0^0^0^0^0^0^0^0^0^0^0^0^↑, then the operation command will reach the CH452 in the post stage via the CH452 in the front stage, while the blank operation command is left for the CH452 in the front stage. In addition, in the non-cascade application, the blank operation command can only send the valid data B8~B11, and the simplified description is 0^0^0^0^↑. The blank operation can also be used to wake up the CH452 in the low power sleep state to avoid other commands affecting the working state of the CH452.

6.2. Load Light Column Value: 00010[LEVEL]B

The load light column value command is used to specify the new light column value LEVEL, which is valid from 00H to 40H. This command causes the LED with the addressing less than the light column value ON, while the LED with the addressing greater than or equal to the light column value OFF. For example, the command data 000100000000B represents that the loaded light column value is 00H, then all LEDs will be OFF. The command data 000100010110B represents that the loaded light column value is 16H, then the LEDs (16 LEDs will be ON in total) addressed from 00H to 15H will be ON, while the LEDs addressed from 16H to 3FH will be OFF. The command data 000101000000B represents that the loaded light column value is 40H, then all the LEDs will be ON.

6.3. Segment Addressing Clear to 0: 000110[BIT_ADDR]B

The segment addressing clear to 0 command is used to turn off the LEDs at the specified address (or the designated segment of the tubes). This command can only turn off one LED at the specified address at a time and does not affect the status of other LEDs at all. Refer to the Matrix Addressing Table for the addressing order of the segment addressing. For example, the command data 000110111010B represents that the LED addressed to 3AH is OFF.

6.4. Segment Addressing Set to 1: 000111[BIT_ADDR]B

The segment addressing set to 1 command is used to turn on the LEDs at the specified address (or the designated segment of the tubes). This command can only turn on one LED at the specified address at a time and does not affect the status of other LEDs at all. Refer to the Matrix Addressing Table for the addressing

order of the segment addressing. For example, the command data 000111000110B represents that the LED addressed to 06H is ON.

6.5. Chip Internal Reset: 001000000001B

The internal reset command restores the registers and parameters of CH452 to the default state. When the chip is powered on, CH452 is always reset. At this time, all registers are reset to 0 and all parameters are restored to the default values.

6.6. Entering Sleep State: 001000000010B

The command to enter sleep state causes the CH452 to pause display driver and keyboard scan, and enter the low-power sleep state, thus saving electricity. Before the execution of this command, the display drive enable and key scan enable of CH452 should be turned off with the command of setting system parameters, the execution of the command itself must be completed within 20uS, and the DCLK or SCL pin must remain unchanged after the command is sent.

CH452 in low-power sleep state can be waked up by any of the following two events. The first event is the detection of keys on SEG3-SEG0, and the valid key code is 40H to 5FH. The second event is the reception of the operation command (usually the blank operation command) sent by the MCU, or the detection of the status change of DCLK or SCL pin. Sleep and wake up operations themselves do not affect the working state of CH452.

6.7. Set Auxiliary Parameters: 001010100[GPIE]0[LMTC]B

"Set Auxiliary Parameters Command" is used to set the auxiliary parameters of CH452: segment current limit LMTC, general-purpose input pin enable GPIE. By default, there is no upper limit for the segment output current, and the actual short-circuit current can reach above 80mA. When the segment current limit LMTC is set to 1, the output current of SEG segments in CH452 will be limited to 30mA, so that 8 serial current limiting resistors between the segment drive pins and the LED Nixie tubes can be removed. The general-purpose input pin enable GPIE is used to enable the GPIE pin state input, and the bit 7 of the 8-bit key code obtained in the 2-wire interface mode is the GPI input state.

6.8. Word Data Left Shift: 001100000000B

The word data left shift command shifts the word data of CH452 to the left once, that is, moves one bit from DIG0 to DIG7, and then complement the data 00H to the right-most DIG0. For example, when the LED Nixie tubes DIG7 ~ DIG0 display "87654321", if the left shift command of the word data is executed, and the display will change to "7654321" (non-decoding mode) or "76543210" (BCD decoding mode).

6.9. Word Data Right Shift: 001100000010B

The word data right shift command shifts the word data of CH452 to the right once, that is, moves one bit from DIG7 to DIG0, and then complement the data 00H to the left-most DIG7. For example, when the LED Nixie tubes DIG7 ~ DIG0 display "87654321", if the right shift command of the word data is executed, and the display will change to "8765432" (non-decoding mode) or "08765432" (BCD decoding mode).

6.10. Word Data Left Cycle: 001100000001B

The word data left cycle command cycles the word data of CH452 to the left once, that is, moves one bit from DIG0 to DIG7, and then complement the original DIG7 data to the right-most DIG0. For example, when the LED Nixie tubes DIG7 ~ DIG0 display "87654321", if the left cycle command of the word data is executed, and the display will change to “76543218”.

6.11. Word Data Right Cycle: 001100000011B

The word data right cycle command cycles the word data of CH452 to the right once, that is, moves one bit

from DIG7 to DIG0, and then complement the original DIG0 data to the left-most DIG7. For example, when the LED Nixie tubes DIG7 ~ DIG0 display "87654321", if the right cycle command of the word data is executed, and the display will change to “18765432”.

6.12. Customized BCD Code: 00111[SELF_BCD]B

The customized BCD code command is used to define the special characters that are not realized in regular BCD decoding. CH452 supports a customized BCD code whose BCD value is 1EH. The display code is specified by the command. The coding has 7 bits, corresponding to 7 segments of the LED Nixie tube respectively, and the decimal point is independently controlled by the highest bit of the BCD value. For example, the command data 001110111110B represents the customized BCD character U (the displayed data in the corresponding segment is 3EH). In BCD decoding mode, when the MCU is required to display the BCD value 1EH, CH452 will display the character U in the corresponding LED Nixie tube. When the MCU is required to display the BCD value 9EH, CH452 will display the character U. (including the decimal point) in the corresponding LED Nixie tube.

6.13. Set System Parameters: 01000[GPOE][INTM][SSPD][DPLR]0[KEYB][DISP]B

"Set System Parameter Commands" is used to set system-level parameters of CH452: display driver enable DISP, keyboard scanning enable KEYB, watchdog enable WDOG, word drive output polarity DPLR, scintillation speed SSPD, interrupt output mode INTM, general-purpose output pin enable GPOE. Each parameter is controlled by 1-bit data. Please refer to the following table for details. For example: Command data 010000000001B represents that turn off keyboard scan function, and enable display scan driver.

Bit	Parameter description	Abbreviation	Bit is 0 (default)	Bit is 1
0	Display drive function enable	DISP	Turn off display driver	Allow display driver
1	Keyboard scan function enable	KEYB	Turn off keyboard scan	Enable keyboard scan
2	Watchdog function enable	WDOG	Turn off watchdog	Enable watchdog
3	Word drive DIG output polarity	DPLR	Active at low level	Active at high level
4	Scintillation speed/frequency	SSPD	Low speed (about 2.3Hz)	Fast speed (about 4.6Hz)
5	Key interrupt output mode	INTM	Active at low level (Level or edge interrupt)	Low level pulse (Edge interrupt)
6	General-purpose output pin enable (Only DIG6 and DIG7 pins)	GPOE	Used for display driver word output Disable general-purpose output	When the scan limit is 1~6, the redundant DIG6 and DIG7 pins are used for general-purpose output, which are controlled by the flash bits D6S and D7S respectively

6.14. Set Display Parameters: 0101[MODE][LIMIT][INTENSITY]B

"Set Display Parameters Command" is used to set the display parameters of CH452: decoding MODE, scanning LIMIT, and display INTENSITY. Decoding MODE is controlled by 1-bit data. BCD decoding mode is selected when it's set to 1, and non-decoding mode (default value) is selected when it's set to 0. The scan limit is controlled by 3-bit data, and the scan limit of data 001B~111B and 000B is set as 1~7 and 8 respectively (default value). The display brightness INTENSITY is controlled by 4-bit data, and the display

drive duty ratio of data 0001B~1111B and 0000B is set as 1/16~15/16 and 16/16 respectively (default value). For example, the command data 010101110000B represents the selection of non-decoding mode, the scanning limit is 7, and the duty ratio of display driver is 16/16. The command data 010110001010B represents the BCD decoding mode, the scanning limit is 8, and the duty ratio of display driver is 10/16.

6.15. Set Flash Control: 0110[D7S][D6S][D5S][D4S][D3S][D2S][D1S][D0S]B

"Set Flash Control Command" is used to set the flash display property of CH452: D7S~D0S correspond to 8 word drive DIG7~DIG0 respectively. The flash property D7S~D0S is controlled by 1-bit data respectively. When the corresponding data bit is set to 1, enable flash display, otherwise it is the normal display without flash (default value). For example: the command data 011000100001B represents that set the flash display of the LED Nixie tubes DIG5 and DIG0, and the rest of the LED Nixie tubes are normally displayed without flash.

6.16. Load Word Data: 1[DIG_ADDR][DIG_DATA]B

"Word-data loading command" is used to write the word data DIG_DATA to the data register at the specified address DIG_ADDR. DIG_ADDR specifies the address of the data register through 3-bit data. Data 000B~111B specify the addresses 0 ~ 7 respectively, corresponding to 8 LED Nixie tubes driven by the pins DIG0~DIG7. DIG_DATA is 8-bit word data. For example, the command data 100001111001B represents that write the word data 79H into the first data register. If it is the non-decoding mode, then the LED Nixie tube driven by DIG0 pin will display E. The command data 110010001000B represents that the word data 88H is written into the 5th data register. If it is the BCD decoding mode, the LED Nixie tube driven by DIG4 pin will display 8..

6.17. Read Chip Version: 000001000000B (Read)

“Read chip version command” only supports 2-wire interface mode, which is used to get the version number of CH452 chip. It will return 10H for V1 version and return 20H for V2 version.

6.18. Read SEG Pins: 0001[SEG7][SEG6][SEG5][SEG4][SEG3][SEG2][SEG1][SEG0]B (Read)

"Read SEG Pin Command" only supports the 2-wire interface mode, which is used to obtain the current state of CH452 SEG7 ~ SEG0 pins, that is, input 8-bit data from the pins.

6.19. Read Key Code: 0111[KEY7][KEY6][KEY5][KEY4][KEY3][KEY2][KEY1][KEY0]B (Read)

"Read Key Code Command" is used to get the code for the valid key that CH452 recently detects. CH452 outputs the key code from DOUT pin of 4-wire interface or SDA pin of 2-wire interface. The valid data of the key code is bit 7 ~ bit 0 (4-wire interface only provides the lower 7 bits), where bit 7 is GPI input status flag bit, bit 6 is status code, bit 5 ~ bit 0 are scan codes and key codes. The bit data B0~B7 of the read key code command can be any value in the 4-wire interface mode, so the MCU can shorten the command to 4-bit data B8~B11. Yet B7~B0 should be 1 in the 2-wire interface mode so that the SDA pin can be input. For example, if CH452 detects a valid key and interrupts, the MCU sends out a read key code command 0111xxxxxxxxB to CH452 at first and then obtains the key code from CH452. Returns the ID data 2AH if this is the first command after reset.

6.20. 2-wire Interface ACK: 0111xxxxxxxxB (Write)

The 2-wire interface ACK command is used to enable the reply bit compatible with I^{2}C in 2-wire interface mode. This command must be executed without display driver and keyboard scan enabled, usually it's executed once after each power on reset. After enabling the reply bit, CH452 will reply to the read and write operation received that matches its address.

7. Parameters

7.1. Absolute Maximum Value

Critical value or exceeding the absolute maximum value may cause the chip to work abnormally or even be damaged.

Name	Parameter description		Min.	Max.	Unit
TA	Ambient temperature during operation	V2 version	-40	85	℃
		V1 version	-40	70	
TS	Ambient temperature during storage		-55	125	℃
VCC	Supply voltage (VCC is connected to the power supply, GND is grounded)		-0.5	6.0	V
VIO	Voltage on the input or output pins		-0.5	VCC+0.5	V
IMdig	Continuous drive current of single DIG pin		0	180	mA
IMseg	Continuous drive current of single SEG pin		0	30	mA
IMall	Total continuous drive current of all SEG pins		0	200	mA

7.2. Electrical Parameters

Test Conditions: TA=25℃, VCC=5V

Name	Parameter description	Min.	Typ.	Max.	Unit
VCC	Supply voltage of V2 version chip	2.7	5	5.3	V
VCC1	Supply voltage of V1 version chip	3.5	5	5.3	V
ICC	Current of power supply	0.05	80	150	mA
Islp5	5V low power sleep current (all I/O suspended)		0.12		mA
Islp3	3.3V low power sleep current (all I/O suspended)		0.05		mA
VILseg	Low level input voltage of SEG pin	-0.5		0.6	V
VIHseg	High level input voltage of SEG pin	1.8		VCC+0.5	V
VIL	Remaining pins low level input voltage	-0.5		0.8	V
VIH	Remaining pins high level input voltage	2.2		VCC+0.5	V
VOLdig	Low level output voltage of DIG pin (-100mA)			0.8	V
VOHdig	High level output voltage of DIG pin (10mA)	4.2			V
VOLseg	Low level output voltage of SEG pins (-20mA)			0.8	V
VOHseg	High level output voltage of SEG pins (25mA)	4.2			V
VOL	Low level output voltage of other pins (-4mA)			0.5	V
VOH	High level output voltage of other pins (4mA)	4.5			V
IDN1	Input pull-down current of SEG pin	-40	-120	-360	uA
IDN0	Input pull-down current of RSTI pin	-60	-120	-200	uA

IUP1	Input pull-up current of DCLK, LOAD or SCL pin	15	50	300	uA
IUP2	Input pull-up current of DIN or SDA pin	50	100	200	uA
IUP3	Output pull-up current of DOUT or INT# pin	250	1000	5000	uA
IUP0	Input pull-up current of H3L2 pin	15	30	300	uA
VR	Default voltage threshold of power on reset	1.9	2.2	2.7	V

7.3. Internal Timing Parameters

Test Conditions: TA=25°C, VCC=5V

Name	Parameter description	Min.	Typ.	Max.	Unit
TPR	Reset pulse width generated during power on detection	75	140	350	mS
TWR	Reset pulse width generated by watchdog overflow	37	55	120	mS
TWP	Cycle of watchdog overflow	230	350	800	mS
TWK	The time to be awakened to resume work during sleep	0.01	1	6	mS
TDP	Display scanning cycle (TDW* scanning limit)	2.5	4	6.5	mS
FSPS	Frequency of flash display (slow/default)	1	2.3	3.2	Hz
FSPF	Frequency of flash display (fast)	2.1	4.6	6.4	Hz
TKS	Keyboard scanning interval, key response time	18	28	60	mS
TINT	When the key interrupt output mode is low level pulse The width of the low level pulse output by DOUT or SDA	2	4	8	uS

7.4. 4-wire Interface Timing Parameters

Test Conditions: TA=25°C, VCC=5V, refer to the attached figure

(Note: The unit of measurement in this table is nanosecond, namely, 10^{-9} seconds. If the maximum value is not indicated, the theoretical value can be infinite.)

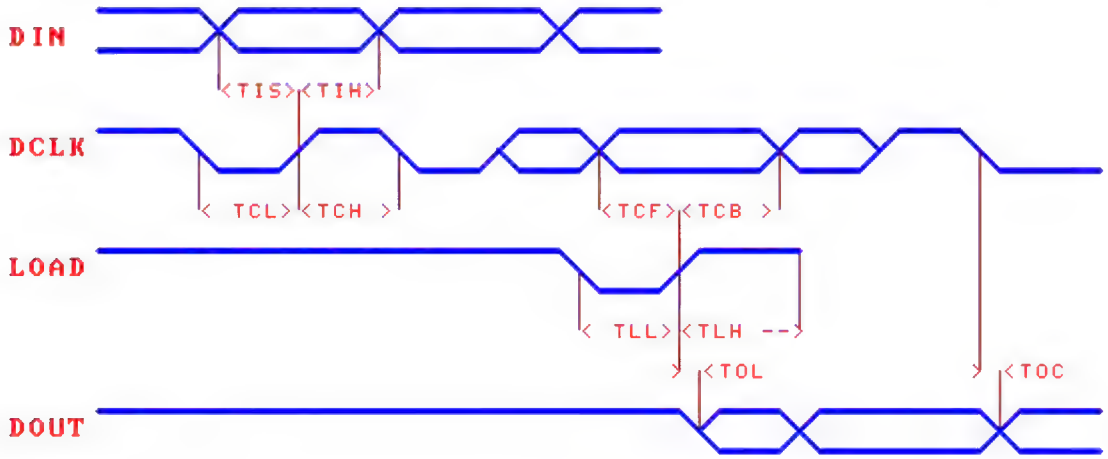

Name	Parameter description	Min.	Typ.	Max.	Unit
TIS	Setup time of DIN data input	25			nS
TIH	Hold time of DIN data input	10			nS
TCL	Low level width of DCLK clock signal	50			nS
TCH	High level width of DCLK clock signal	50			nS
TCF	DCLK stability time before the rising edge of LOAD	25			nS
TCB	DCLK stability time after the rising edge of LOAD	25			nS
TLL	Low level width of LOAD signal	100			nS
TLH	High level width of LOAD signal	100			nS
TLC	LOAD signal cycle (command cycle)	2000			nS
TOL	DOUT output delay after the rising edge of LOAD	2		25	nS
TOC	DOUT output delay after the falling edge of DCLK	2		25	nS
TE	DCLK, LOAD rising or falling time	0		10	nS
Rate	Average data transmission rate	0		4M	bps

7.5. 2-wire Interface Timing Parameters

Test Conditions: TA=25°C, VCC=5V, refer to the attached figure

(Note: The unit of measurement in this table is microsecond, namely, 10^{-6}seconds. If the maximum value is not indicated, the theoretical value can be infinite.)

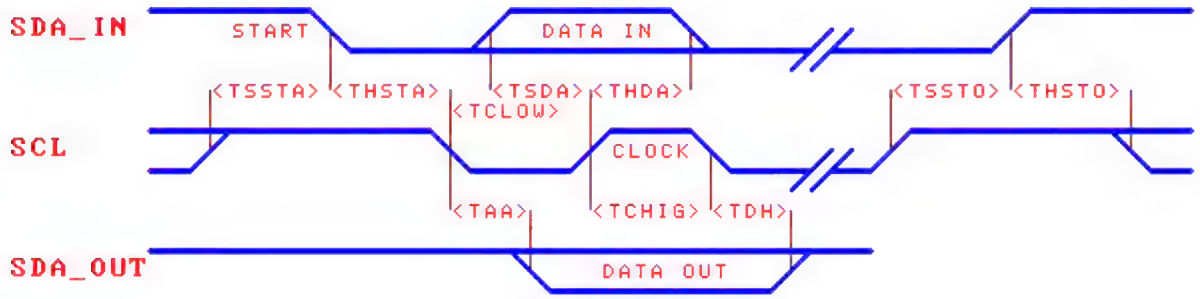

Name	Parameter description	Min.	Typ.	Max.	Unit
TSSTA	Setup time of SDA falling edge start signal	0.5			uS
THSTA	Hold time of SDA falling edge start signal	0.5		200	uS
TSSTO	Setup time of SDA rising edge stop signal	0.5			uS
THSTO	Hold time of SDA rising edge stop signal	0.5			uS
TCLOW	Low level width of SCL clock signal	1		200	uS
TCHIG	High level width of SCL clock signal	1		200	uS
TSDA	Setup time of SDA input data to SCL rising edge	0.2			uS
THDA	Hold time of SDA input data to SCL rising edge	1			uS

TAA	Delay of valid SDA output data to SCL falling edge	0		1	uS
TDH	Delay of invalid SDA output data to SCL falling edge	0		1	uS
TBUF	Buffer time between two consecutive operations	1			uS
Rate	Average data transmission rate	500		400K	bps

8. Application

8.1. 4-wire Interface Connection to MCU (Figure below)

The H3L2 pin of U2 (CH452A) is at high level (or suspended), and CH452 is connected to the MCU U1 (MCS51 series 89C2051) through a 4-wire serial interface. Capacitors C2 and C3 are arranged near the power pins of U2 to decouple the power supply and reduce the interference caused by high drive current. When the keyboard function is not needed, the KEY signal line can be removed and only the DCLK, DIN and LOAD three signal lines can be used. When the keyboard function is used, the KEY signal line of DOUT pin of CH452 can be connected to the interrupt input pin of the MCU. If it is connected to the common I/O pin, the query mode should be used to determine whether CH452 has detected a valid key. CH452 can also provide the power on reset signal RESET to the MCU.

Since some I/O pins of the standard MCS51 MCU is weak pull-up quasi bidirectional ports, it is recommended to add the pull-up resistors to DIN, DCLK, LOAD and DOUT to reduce interference in the circuit that is remotely connected to CH452.

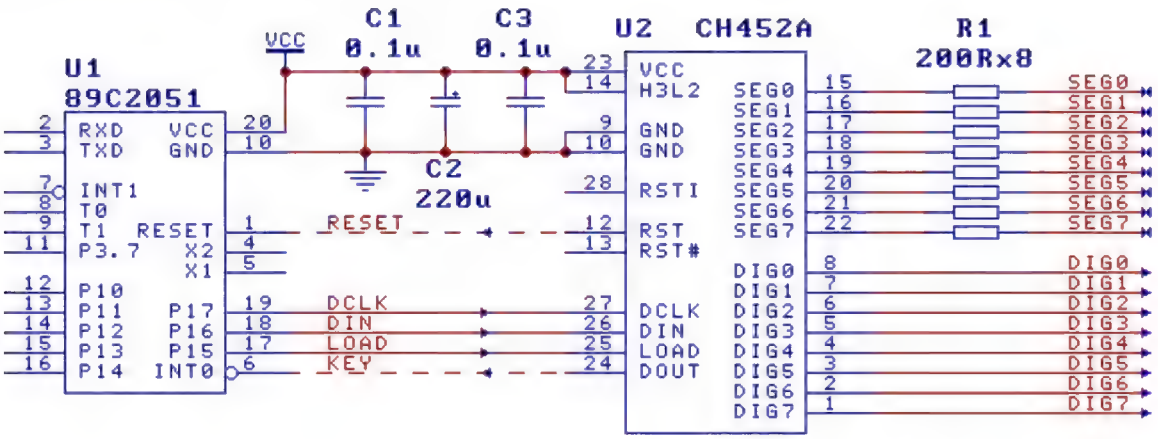

8.2. 2-wire Interface Connection to MCU (Figure below)

The H3L2 pin of U2 (CH452A) is at low level, and CH452 is connected to the MCU U1 through a 2-wire serial interface. When the keyboard function is not needed, the KEY signal line can be removed and only the SCL and SDA two signal lines can be used. When the keyboard function is used, the KEY signal line of INT# pin of CH452 can be connected to the interrupt input pin of the MCU or the ordinary I/O pin for inquiry. If the output mode of key interrupt is selected as "low level pulse", then SDA can be used to replace INT# to provide keyboard interrupt to the MCU.

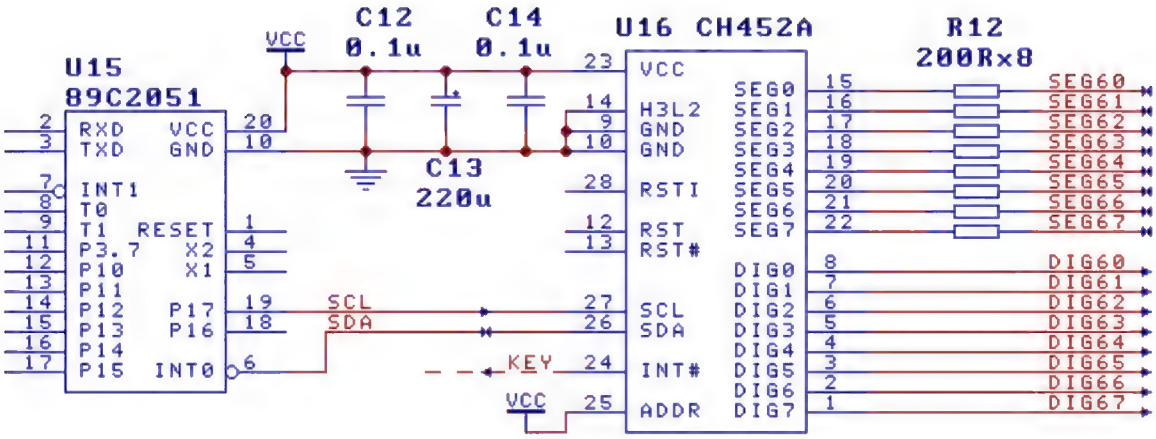

8.3. Drive Common Cathode LED Nixie tube (as shown below)

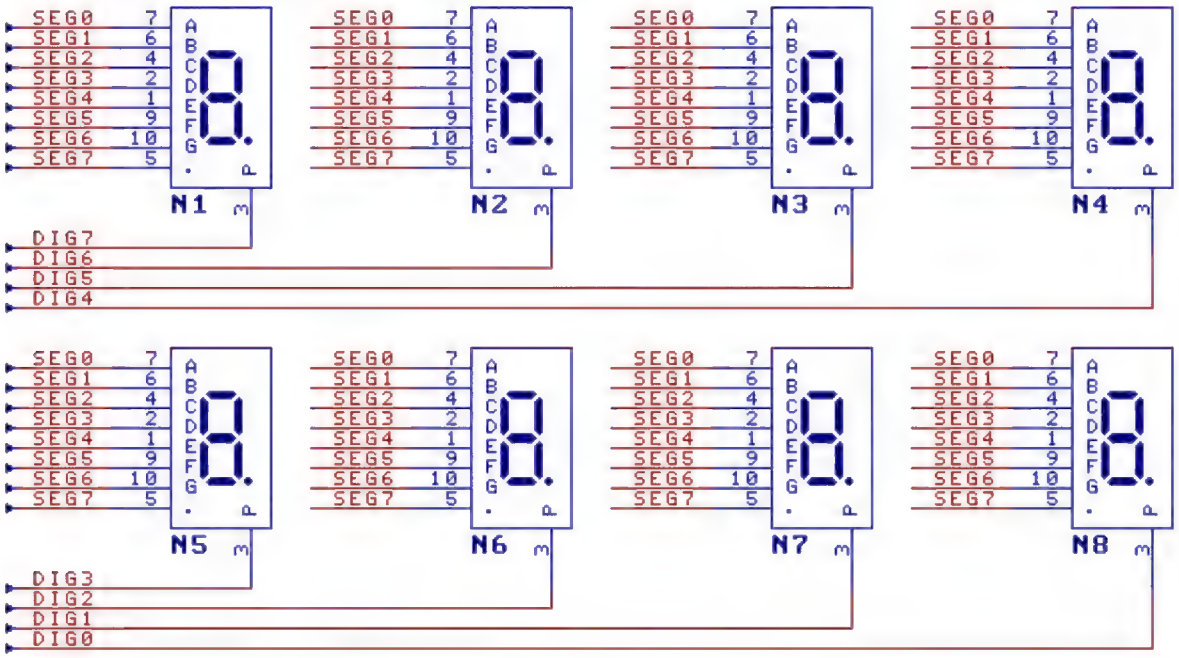

CH452 can drive 8 common cathode LED Nixie tubes dynamically. After the pins on the same segments of all LED Nixie tubes are connected in parallel (segments A-G and decimal point), they are connected with the segment drive pins SEG0-SEG7 of CH452 through a series current limiting resistors R1 (or R12). The cathodes of each LED Nixie tube are driven by the pins DIG0~DIG7 of CH452 respectively.

If the segment current limiting LMTC function of CH452 is enabled, then the segment current limiting resistor R1 (or R12, the same below) can be removed; otherwise, it is necessary to connect R1 in series for the segment drive pins to limit and balance the drive current of each segment. The greater the resistance of the series current limiting resistor R1 is, the smaller the segment drive current is, and the lower the display brightness of the LED Nixie tube is. The resistance of R1 is generally between 50Ω and 1KΩ. Under the same other conditions, a higher resistance value should be preferred. At the supply voltage of 5V, the corresponding segment current is usually 14mA when the series resistance is 200Ω.

On the panel layout of the LED Nixie tube, it is recommended that the order of the LED Nixie tube from left to right is N1 to the left and N8 to the right, so as to match the word left and right shift commands and the word left and right cycle shift commands. If the number of LED Nixie tubes is less than 8, then N1, N2, N3 and other LED Nixie tubes on the left side can be removed first, and the corresponding scanning limit can be set to obtain a higher dynamic drive current, so as to improve the display brightness. When the number of LED Nixie tube is less than 7 and the scanning limit is lower than 7, the redundant DIG6 and DIG7 pins can

be used for the general-purpose output pin by setting GPOE to 1.

8.4. Drive Common Anode LED Nixie tube (as Shown Below)

If the segment drive signals SEG0 ~ SEG7 and the word drive signals DIG0 ~ DIG7 are inverted respectively, then the common anode LED Nixie tube can be driven, but the keyboard scan function is not supported. In the figure below, the segment signals SEG0 ~ SEG7 is reversely driven by U22 Darlington array, and can also be replaced by 8 NPN triodes whose bases are connected with the current limiting resistor in series. The word signal DIG0 ~ DIG7 is reversely driven by 8 PNP triodes T1. If U22 itself does not support constant current drive, then the resistor R13 is used to limit and balance the segment current. The drive current of this circuit is several times larger than that of the common cathode LED Nixie tube directly driven by CH452. Corresponding resistance values should be selected for the resistors R13 and R14 in the figure according to the actual drive current.

In order to save costs, the U22 in the figure below can also be removed and the segment pins are directly driven by CH452. However, only the decoding mode can be used, and the loaded word data must be reversed by bit (0 ON and 1 OFF). It is recommended to load all the word data 0FFH before starting the display.

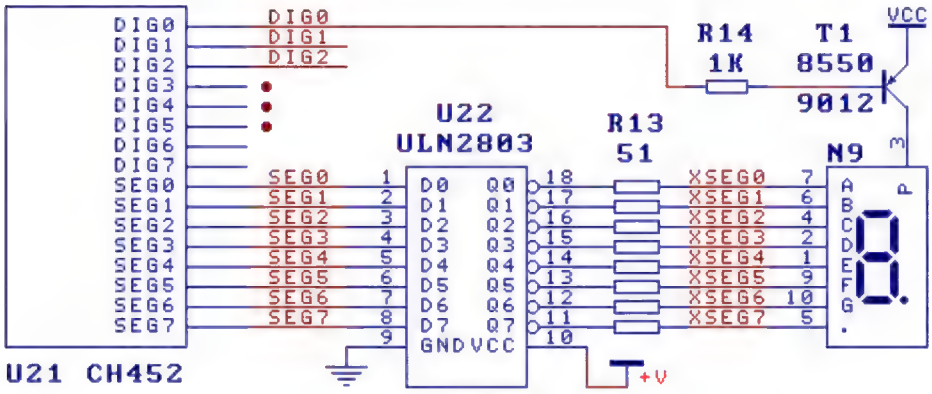

The figure below is a simple large current common anode drive application circuit. Set the word drive DIG output polarity of CH452 as "active at high level", and use N-MOSFET to realize voltage drop and large current drive simultaneously. Usually the current limiting resistor R13 for segment drive can be removed.

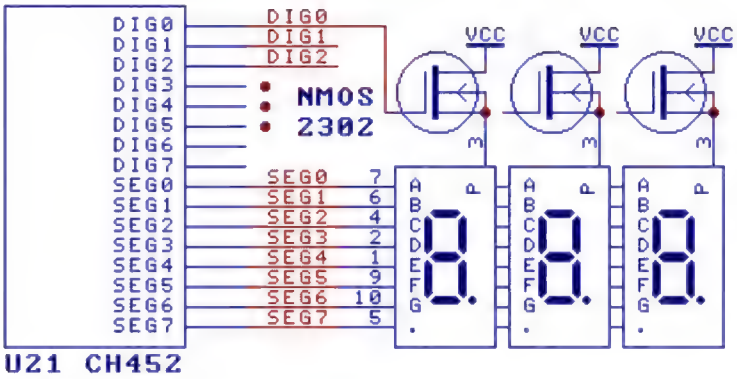

For the large size LED Nixie tube composed of multiple LEDs in series, due to its large voltage drop, the 5V supply voltage cannot drive it directly. Usually it needs to be connected to the high voltage drive circuit. In the figure below, the output polarity of CH452 word drive DIG is set as "active at high level" and then the 24V drive voltage is output after twice phase inversion of NPN triode T2 and PNP triode T3. In combination with the segment inverting drive circuit U22 in the figure above, the large-size common anode LED Nixie tube with high voltage can be driven. Corresponding resistance value should be selected for the resistor R16 in the figure according to the actual drive current size.

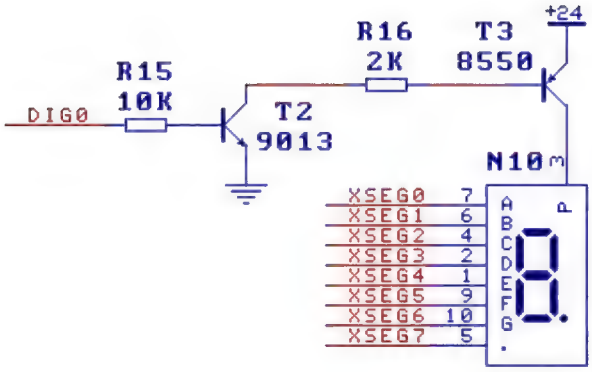

8.5. 8×8 Keyboard Scan (Figure below)

CH452 has a 64-key keyboard scan function. If only a few keys are needed in the application, any unused keys can be removed from 8×8 matrix. In order to prevent short circuit from being formed between SEG signal line and DIG signal line to impact display after the key is pressed, the current limiting resistor R2 should be connected in series between CH452 DIG0~DIG7 and the keyboard matrix, and their resistance can be 1KΩ to 15KΩ. If the MCU enables CH452 to enter the low-power sleep state, then CH452 in sleep state can be waked up by the keys K0~K31. If the MCU has enabled the keyboard scan function of CH452 before, CH452 will provide key interrupt for the MCU after being waked up.

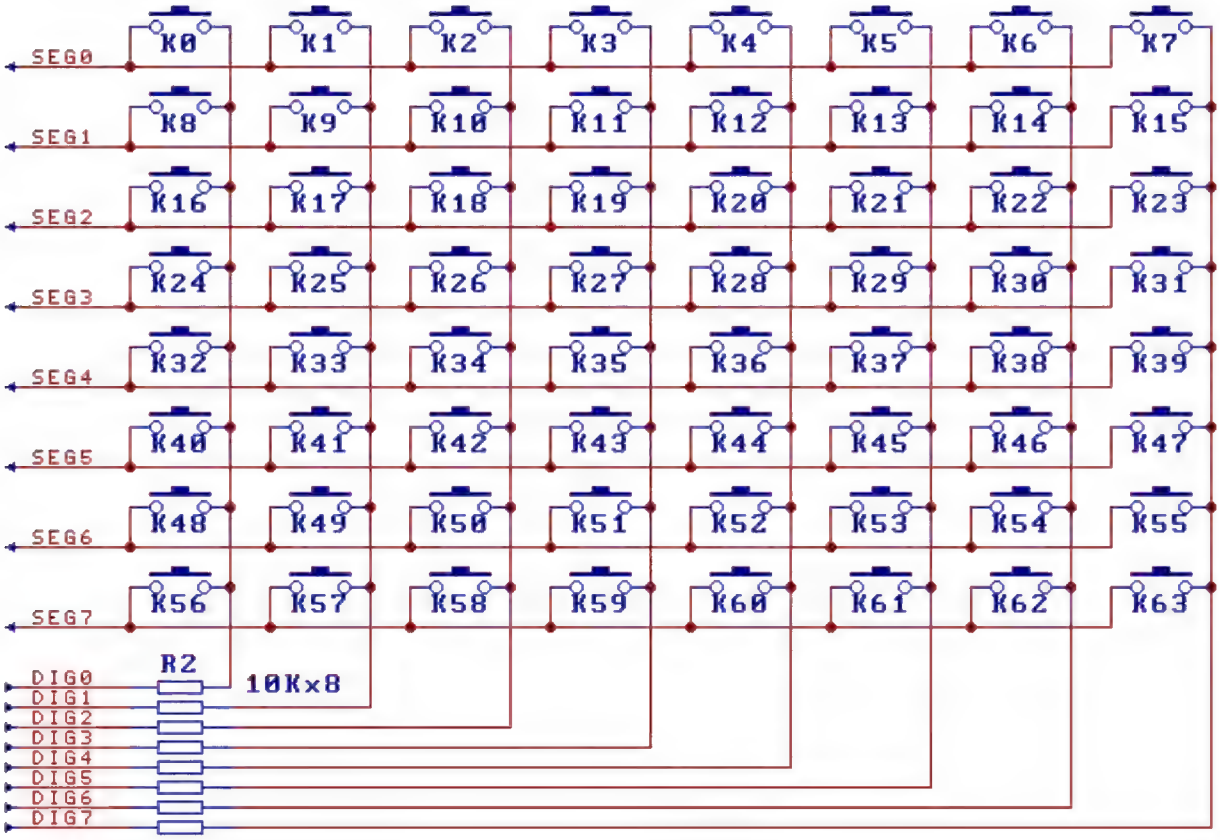

8.6. Complete Application Example (Figure below)

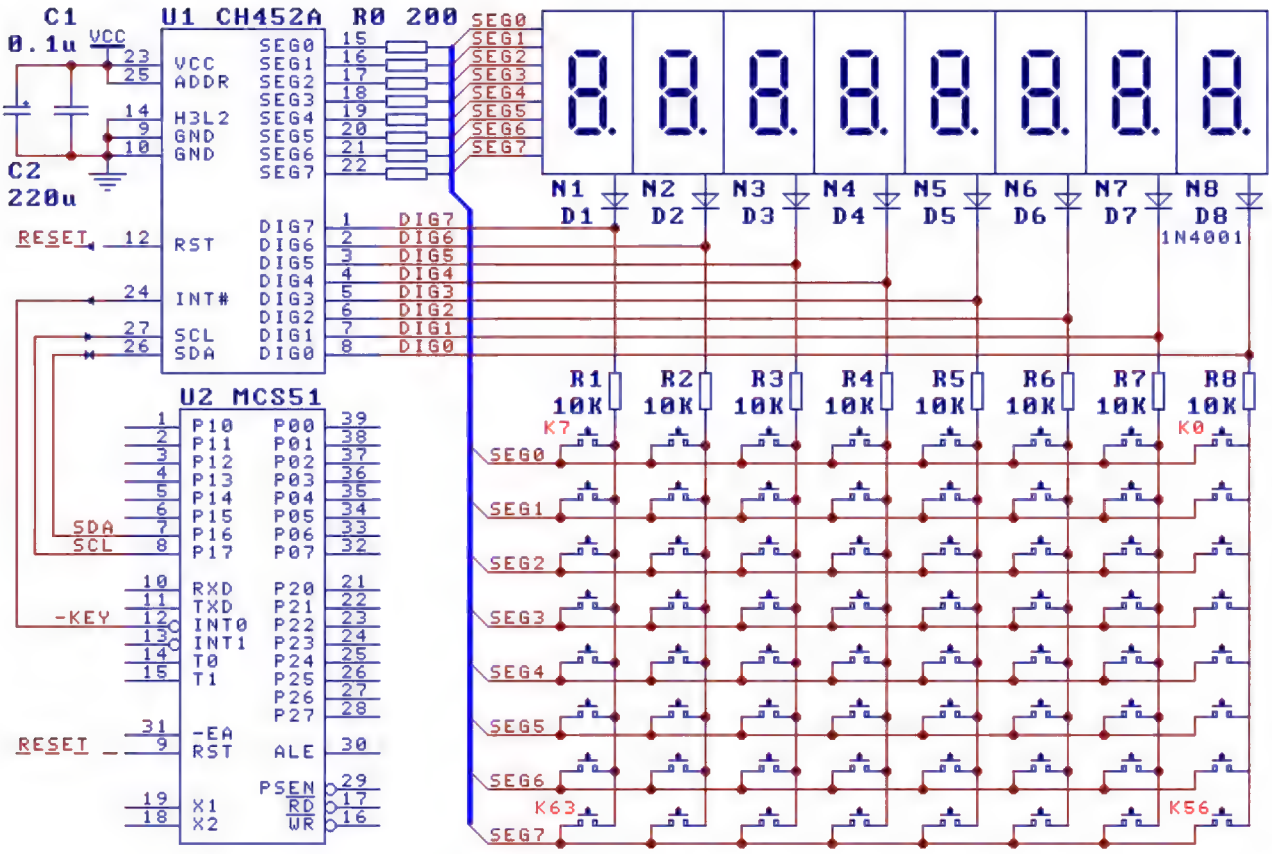

In the figure, the MCU U2 drives 8 common cathode LED Nixie tubes through CH452 and scans 64 keys simultaneously. Due to the reverse leakage of some LED Nixie tubes at high working voltage, it is easy for CH452 to mistake that a key has been pressed down, so it is recommended to use LEDs D1-D8 to prevent the reverse leakage of LED Nixie tubes, and to improve the level of input signals SEG0-SEG7 during keyboard scan to ensure more reliable keyboard scan. When the supply voltage is low (e.g. VCC=3.3V), these LEDs should be removed to avoid affecting the display brightness.

8.7. Multichip Cascade Expansion

When there are more than 8 LED Nixie tubes or more than 64 keys, multiple CH452 can be used for driving.

There are two ways to connect multiple CH452 with the MCU through 4-wire interface: one is in parallel. The MCU provides an independent LOAD signal line for each CH452, but DIN and DCLK signal lines are provided to all CH452 at the same time, that is, each LOAD signal line is equivalent to the chip selection line of each CH452. Second is in series. The MCU provides DCLK and LOAD signal lines to all CH452 at the same time, and it only provides DIN for the first stage CH452, and DIN of the post stage CH452 is connected to the DOUT pin of the front stage CH452.

There are two ways to connect multiple CH452 with the MCU through 2-wire interface: one is independent parallel connection. The MCU provides an independent SCL or SDA signal line for each CH452, and the other signal line is independent or shared. The other is direct parallel connection. The two CH452 use ADDR to select different device addresses, and the two CH452 fully share SCL and SDA signal lines to connect with the MCU.

In the case of multi-chip cascade expansion, the working current is larger, so more attention should be paid to prevent mutual interference. Please refer to the Section 8.8 Anti-interference.

8.7.1. 4-wire Interface Parallel Application (Figure below)

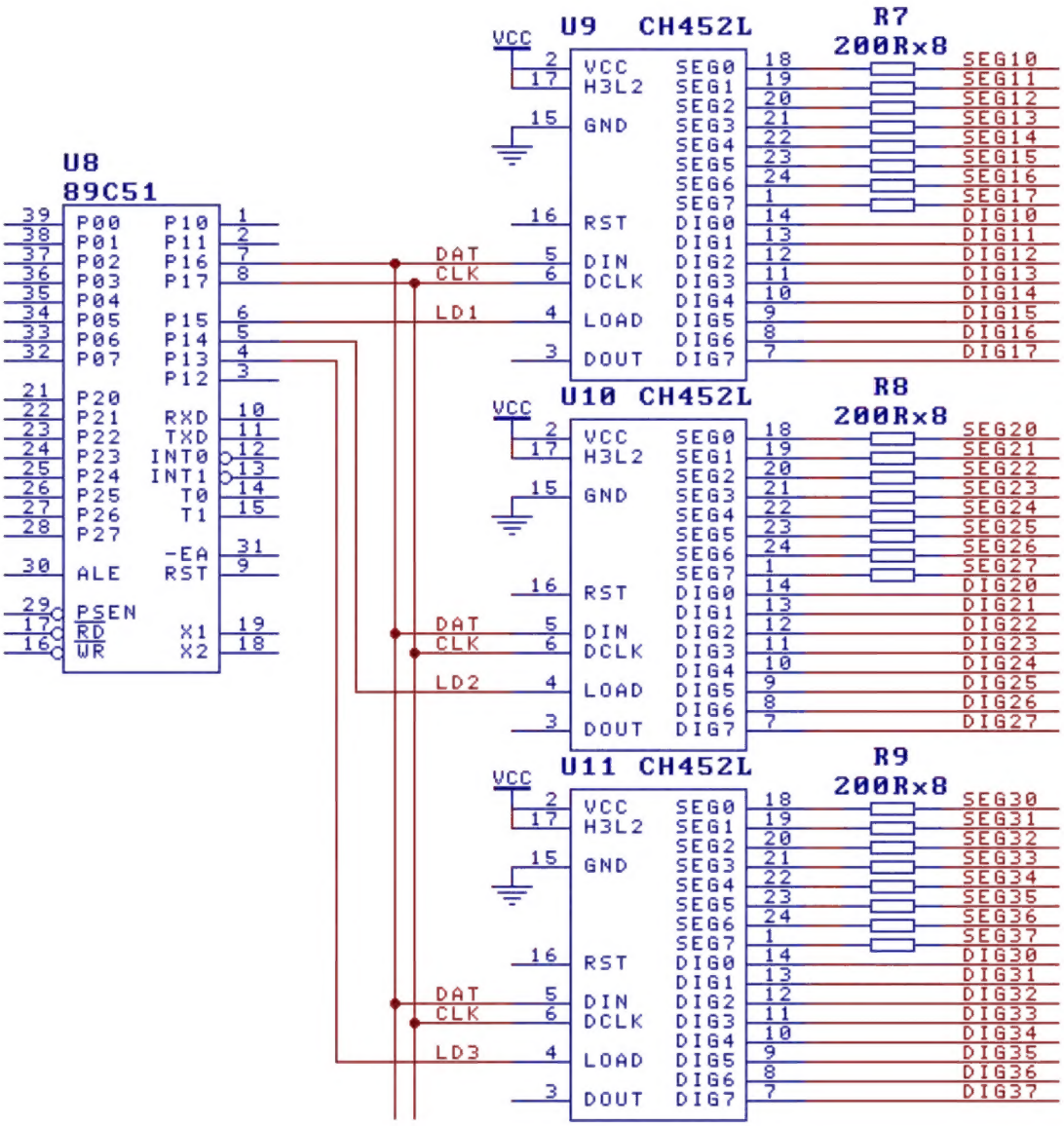

In the figure, 24 LED Nixie tubes are driven by the 4-wire interface parallel cascade. U8 (MCS51 series MCU) provides a set of shared DIN and DCLK signals to all CH452, and a LOAD signal line to each CH452. When U9 needs to be operated, the MCU can output serial data through DIN and DCLK, and then output the load signal to U9 through LD1 to make it perform operation, while U10 and U11 fail to receive LOAD signal, so there is no operation. In parallel mode, each CH452 can enable the keyboard function, and the operation process is simpler than that in series mode.

8.7.2. 4-wire Interface Serial Application (Figure below)

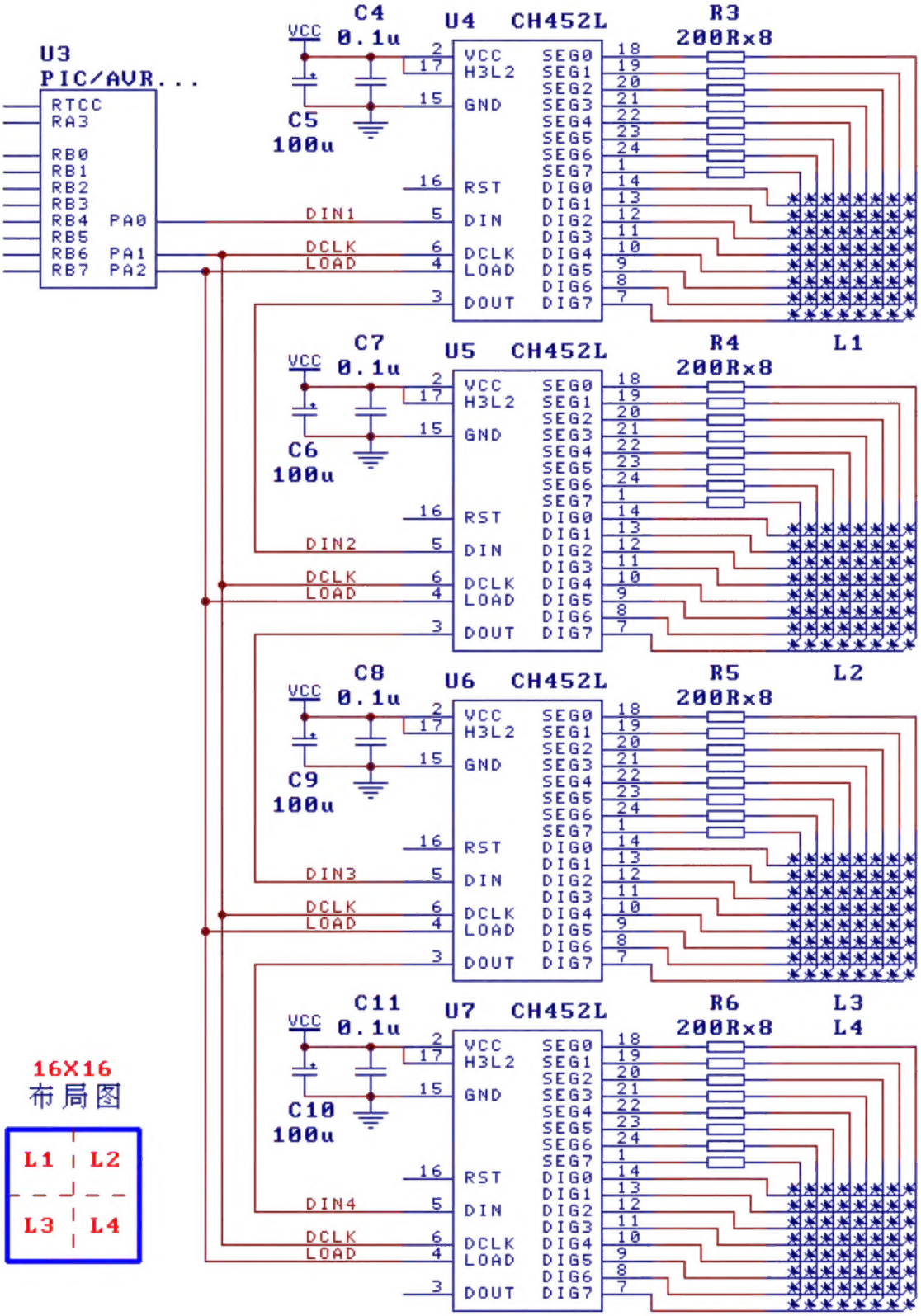

In the figure, the LED dot matrix of LED is driven by 4-wire interface serial cascade, and the MCU U3 controls all CH452 through three signal lines, i.e. DIN1, DCLK and LOAD. Refer to the 16×16 layout diagram, 4 8×8 LED arrays L1 ~ L4 form a 16×16 dot matrix module. If a Chinese character needs to be displayed, only the 32-byte dot matrix data needs to be sent to CH452 through 8 48-bit word-data loading commands. Since there are 4 CH452 cascades, each operation command must be 48-bit data, followed by the command data of U7, U6, U5 and U4. Finally, the output rising edge of LOAD signal line informs all

CH452 to load their respective command data. In series mode, the number of CH452 cascades is not limited, and only 3 I/O pins are occupied, among which DIN and DCLK can also be shared with other interface circuits. The disadvantage is that only the CH452 in the last stage can enable the keyboard function, which needs to be turned on one by one, so the operation process is more complicated than that in the parallel mode.

8.7.3. 2-wire Interface Direct Parallel Application (Figure below)

In the figure, 16 LED Nixie tubes are driven in direct parallel mode through 2-wire interface, and the keyboard function can be enabled respectively by two CH452. The MCU U12 provides a set of shared SCL and SDA signals for two CH452 and other devices compatible with I²C bus timing sequence. ADDR pins of the two CH452 are connected differently, thus selecting different device addresses is convenient for the MCU to distinguish.

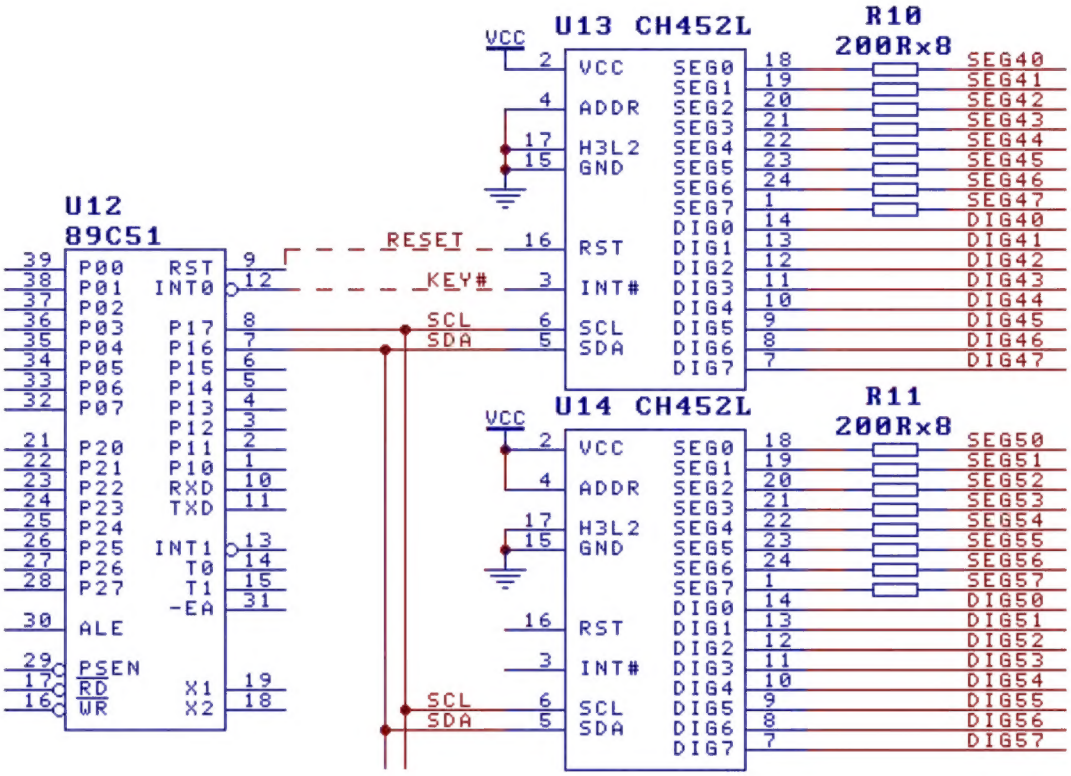

8.8. Anti-interference and Manual Reset (Important)

CH452 has a built-in power on reset function, which can provide power on reset signals for the MCU through the RST and RST# pins. During the normal operation of CH452, the RSTI pin can be used for manual reset input. When high level is input by RSTI, the CH452 chip is reset, and RST and RST# also output reset signals to the external circuits simultaneously.

The RSTI pin is sensitive to noise, if it is connected to the instrument panel as a manual reset input, in order to reduce external interference, it is recommended to connect a capacitor between the RSTI pin and ground GND with a capacity between 1000pF and 5000pF. If the RSTI pin is not used, it can be connected to GND to keep the fixed low level.

As CH452 drives the LED Nixie tube or LED has high current, high glitch voltage will be generated on the power supply. Therefore, if the PCB wiring of the power line or ground wire is not reasonable, it may affect the stability of the MCU or CH452. Solutions to power interference:

① It is recommended to use shorter and thicker power line and ground wire, especially when CH452 and the MCU are arranged on two PCBs;

② The power supply decoupling capacitor is connected in parallel close to the CH452 between the positive and negative power supplies. At least one 0.1uF leaded multilayer ceramic capacitor or

ceramic capacitor and one electrolytic capacitor with a capacity of not less than 100uF.

For external interference when the signal line is long, refer to the following figure for solution:

① At the pin end close to CH452 on the signal line, add the capacitors C21, C22, C23, C25 and C26 with the capacitance of 47pF to 470pF. If the capacitance is larger, the transmission speed of the communication interface for the MCU will be lower.

② Optionally add the resistors R24, R25, R26, R33 and R34 with resistance of 100-470Ω;

③ Reduce the transmission speed between the MCU and CH452 (because of increased resistance and capacitance);

④ If it is driven by a quasi-bidirectional I/O pin (such as standard MCS51 MCU), it will be suggested to add resistors R21, R22, R23, R31 and R32 with resistance of 500Ω to 10KΩ to strengthen the pull-up capacity of the quasi-bidirectional I/O pin for MCS-51 MCU, so as to keep good digital signal waveform during long distance transmission. Pull-up resistors R21, R22, R23, R31 and R32 are not required for short signal lines, and pull-up resistors R21, R22, R23, R31 and R32 are not required for bidirectional I/O pins driven by totem pole.

⑤ It is recommended that the input pins such as H3L2 and ADDR are connected to the fixed level rather than suspended.

In addition, for the application environment with strong interference, it is recommended to refresh CH452 regularly: ① Reset system parameters; ② Reset display parameters; ③ Reset flash control; ④ Reload each display data. This method has no side effects.

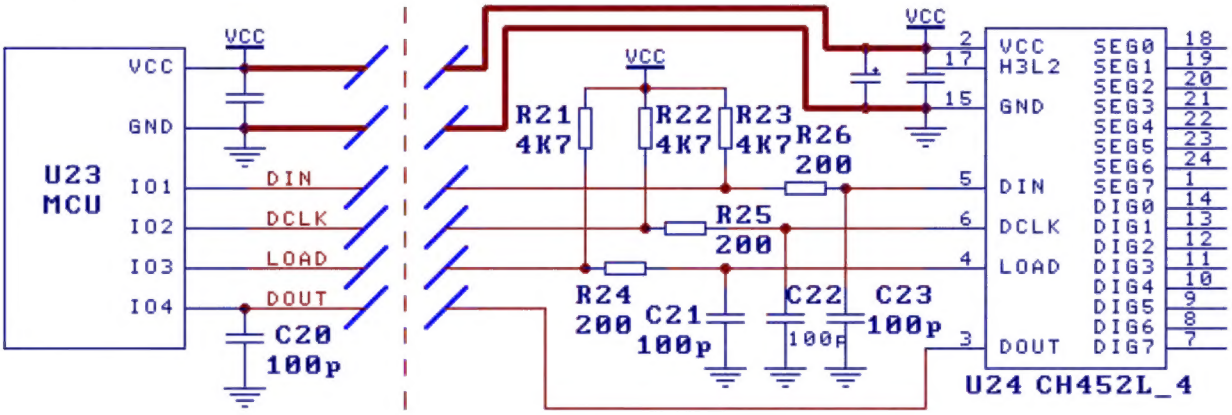

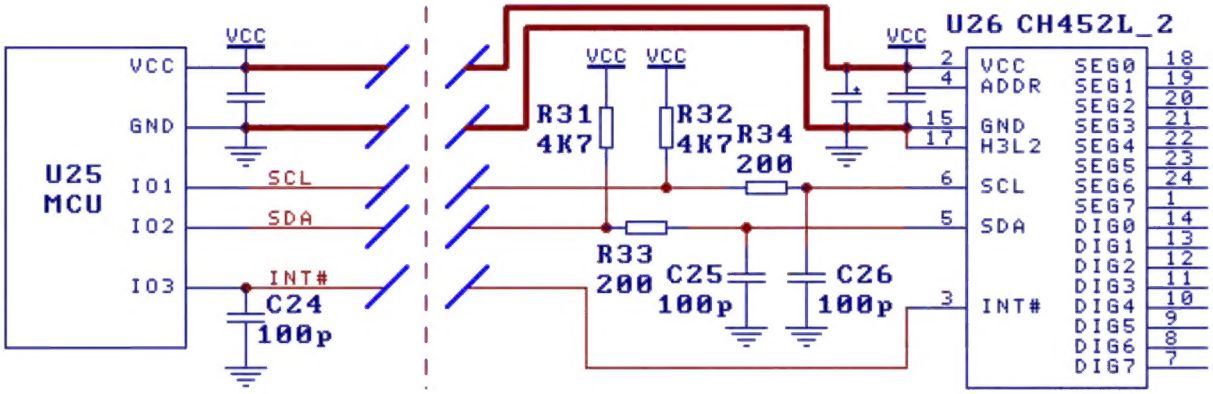

8.9. Interface Program of MCU

The website provides the common C program language and ASM assembly interface program for the MCU.